Deutsches Institut für Bautechnik DIBt

Member of EOTA
www.eota.eu

Approval body for construction products and types of construction

Bautechnisches Prüfamt

An institution established by the Federal and Laender Governments

Designated according to Article 29 of Regulation (EU) No 305/2011 and member of EOTA (European Organisation for Technical Assessment)

European Technical Assessment

ETA-20/0728 of 16 December 2022

English translation prepared by DIBt - Original version in German language

General Part

Technical Assessment Body issuing the European Technical Assessment:	Deutsches Institut für Bautechnik
Trade name of the construction product	Rebar connection with injection system FIS V Plus
Product family to which the construction product belongs	Systems for post-installed rebar connections with mortar
Manufacturer	fischerwerke GmbH & Co. KG Otto-Hahn-Straße 15 79211 Denzlingen DEUTSCHLAND
Manufacturing plant	fischerwerke
This European Technical Assessment contains	24 pages including 3 annexes which form an integral part of this assessment
This European Technical Assessment is issued in accordance with Regulation (EU) No 305/2011, on the basis of	EAD 330087-01-0601, Edition 06/2021
This version replaces	ETA-20/0728 issued on 13 November 2020

Deutsches Institut für Bautechnik
Kolonnenstraße 30 B | 10829 Berlin | GERMANY | Phone: +49 30 78730-0 | Fax: +49 30 78730-320 | Email: dibt@dibt.de | www.dibt.de

The European Technical Assessment is issued by the Technical Assessment Body in its official language. Translations of this European Technical Assessment in other languages shall fully correspond to the original issued document and shall be identified as such.

Communication of this European Technical Assessment, including transmission by electronic means, shall be in full. However, partial reproduction may only be made with the written consent of the issuing Technical Assessment Body. Any partial reproduction shall be identified as such.

This European Technical Assessment may be withdrawn by the issuing Technical Assessment Body, in particular pursuant to information by the Commission in accordance with Article 25(3) of Regulation (EU) No 305/2011.

Specific Part

1 Technical description of the product

The subject of this European Technical Assessment is the post-installed connection, by anchoring or overlap connection joint, of reinforcing bars (rebars) in existing structures made of normal weight concrete, using the "Rebar connection with injection system FIS V Plus" in accordance with the regulations for reinforced concrete construction.
Reinforcing bars made of steel with a diameter ϕ from 8 to 28 mm or the fischer rebar anchor FRA or FRA HCR of sizes M12 to M24 according to Annex A and injection mortar FIS V Plus or FIS V Plus Low Speed are used for rebar connections. The rebar is placed into a drilled hole filled with injection mortar and is anchored via the bond between rebar, injection mortar and concrete.

The product description is given in Annex A.

2 Specification of the intended use in accordance with the applicable European assessment Document

The performances given in Section 3 are only valid if the rebar connection is used in compliance with the specifications and conditions given in Annex B.

The verifications and assessment methods on which this European Technical Assessment is based lead to the assumption of a working life of the rebar connections of at least 50 years. The indications given on the working life cannot be interpreted as a guarantee given by the producer, but are to be regarded only as a means for choosing the right products in relation to the expected economically reasonable working life of the works.

3 Performance of the product and references to the methods used for its assessment

3.1 Mechanical resistance and stability (BWR 1)

Essential characteristic	Performance
Characteristic resistance under static and quasi-static loading	See Annex C 1 and C2
Characteristic resistance under seismic loading	No performance assessed

3.2 Safety in case of fire (BWR 2)

Essential characteristic	Performance
Reaction to fire	Class A1
Resistance to fire	See Annex C 2 and C 3

4 Assessment and verification of constancy of performance (AVCP) system applied, with reference to its legal base

In accordance with European Assessment Document EAD No. 330087-01-0601, the applicable European legal act is: [96/582/EC].

The system to be applied is: 1

5 Technical details necessary for the implementation of the AVCP system, as provided for in the applicable European Assessment Document

Technical details necessary for the implementation of the AVCP system are laid down in the control plan deposited with Deutsches Institut für Bautechnik.

Issued in Berlin on 16 December 2022 by Deutsches Institut für Bautechnik

Dipl.-Ing. Beatrix Wittstock
Head of Section

beglaubigt:
Baderschneider

Installation conditions and application examples reinforcing bars, part 1

Figure A1.1:
Overlap joint with existing reinforcement for rebar connections of slabs and beams

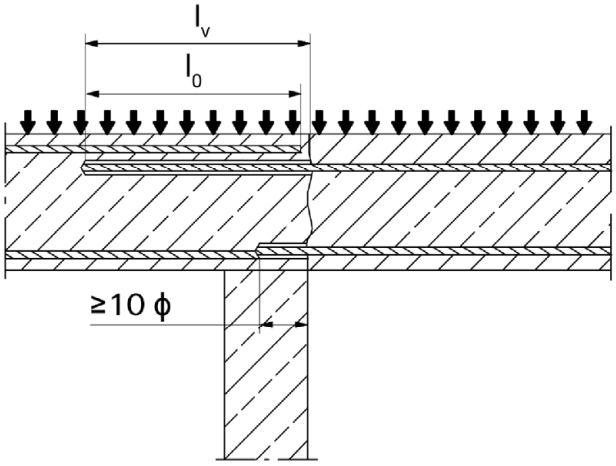

Figure A1.2:
Overlap joint with existing reinforcement at a foundation of a column or wall where the rebars are stressed

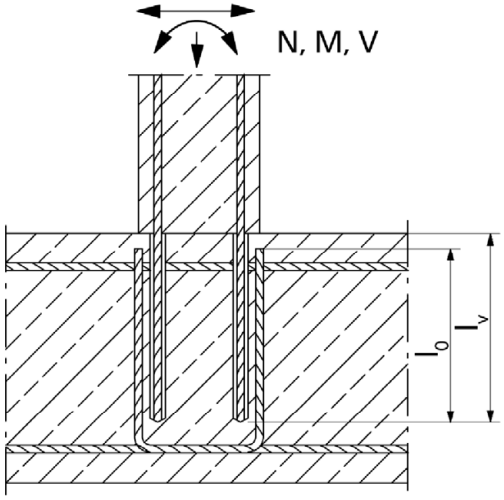

Figure A1.3:
End anchoring of slabs or beams (e.g. designed as simply supported)

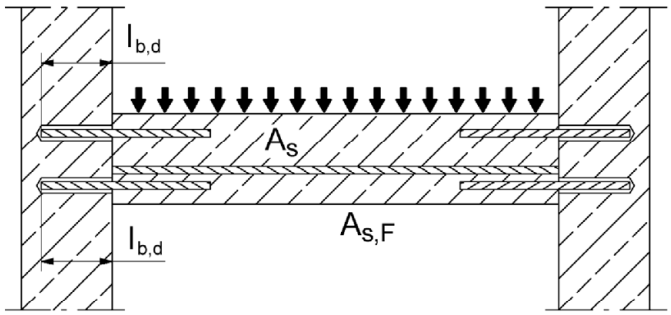

Figures not to scale

Rebar connection with injection system FIS V Plus	**Annex A 1**
Product description Installation conditions and application examples reinforcing bars, part 1	

Installation conditions and application examples reinforcing bars, part 2

Figure A2.1:
Rebar connection for stressed primarily in compression

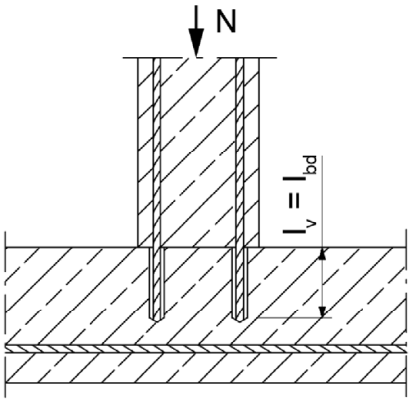

Figure A2.2:
Anchoring of reinforcement to cover the enveloped line of acting tensile force in the bending member

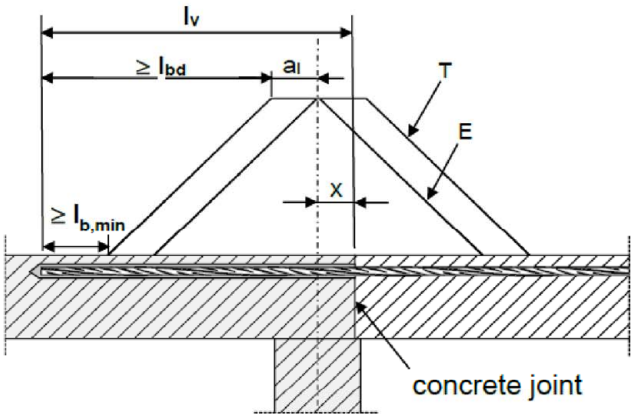

(only post-installed rebar is plotted)

Key to Figure
T Acting tensile force
E Envelope of M_{ed} / z + N_{ed} (see EN 1992-1-1:2011)
x Distance between the theoretical point of support and concrete joint

Note to **figure A1.1** to **A1.3** and **figure A2.1** to **A2.2**

In the figures no traverse reinforcement is plotted, the transverse reinforcement as required by EN 1992-1-1:2011 shall be present.

The shear transfer between old and new concrete shall be designed according to EN 1992-1-1:2011
Preparation of joints according to **Annex B 3** of this document

Figures not to scale

Rebar connection with injection system FIS V Plus	**Annex A 2**
Product description Installation conditions and application examples reinforcing bars, part 2	

Installation conditions and application examples fischer rebar anchor FRA

Figure A3.1:
Lap to a foundation of a column under bending.

1. Shear lug (or fastener loaded in shear)
2. fischer rebar anchor FRA (tension only)
3. Existing stirrup / reinforcement for overlap (lap splice)
4. Slotted hole

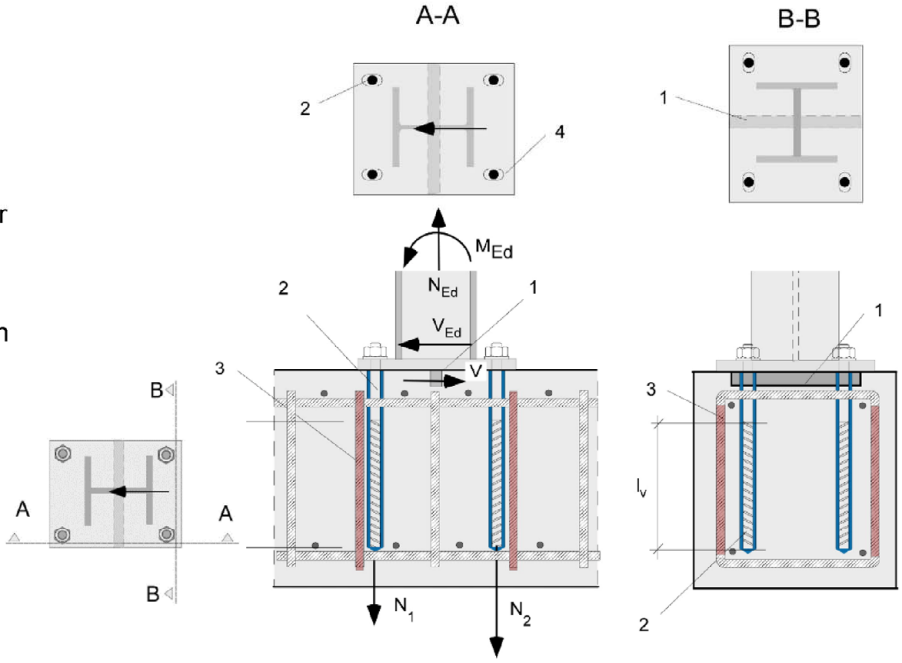

Figure A3.2:
Lap of the anchoring of guardrail posts or anchoring of cantilevered building components.
In the anchor plate, the drill holes for the fischer rebar anchors FRA have to be designed as slotted holes with axial direction to the shear force.

1. Fastener for shear load transfer
2. fischer rebar anchor FRA (tension only)
3. Existing stirrup / reinforcement for overlap (lap splice)
4. Slotted hole

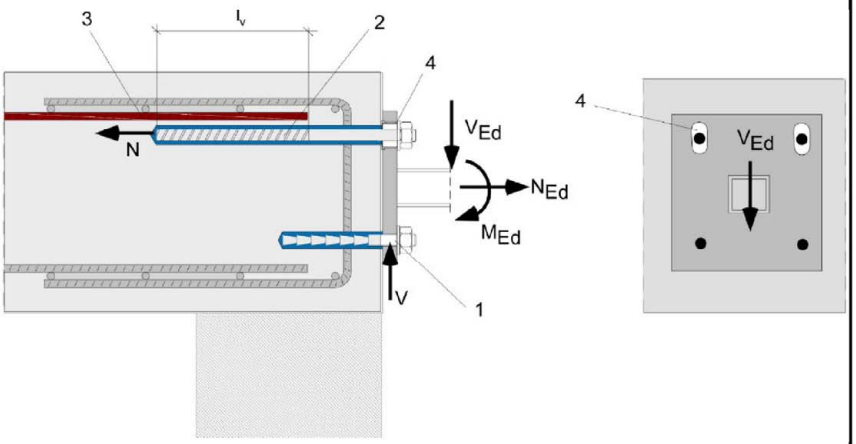

The required transverse reinforcement acc. to EN 1992-1-1:2011 is not shown in the figures. **The fischer rebar anchor FRA may be only used for axial tensile force.** The tensile force must be transferred by lap to the existing reinforcement of the building. The transfer of the shear force has to be ensured by suitable measure, e.g. by means of shear force or anchors with European Technical Assessment (ETA).

Figures not to scale

Rebar connection with injection system FIS V Plus	**Annex A 3**
Product description Installation conditions and application examples fischer rebar anchors FRA	

Overview system components

Injection cartridge (shuttle cartridge) FIS V Plus with sealing cap; Sizes: 360 ml, 825 ml

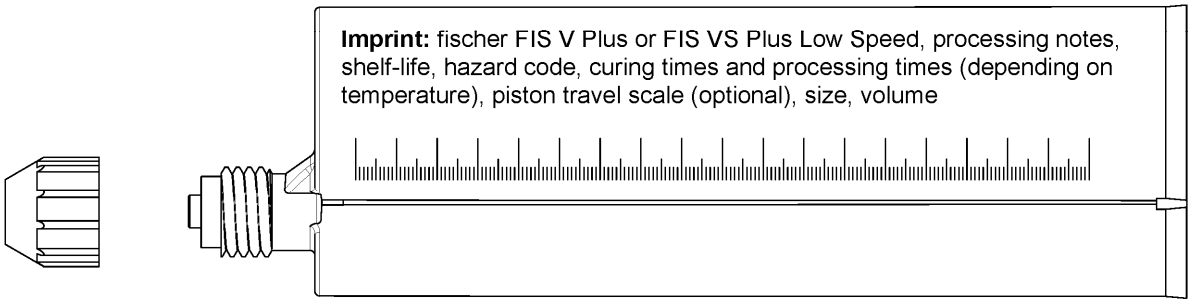

Injection cartridge (coaxial cartridge) FIS V Plus with sealing cap; Sizes: 300 ml, 380 ml, 400 ml, 410 ml

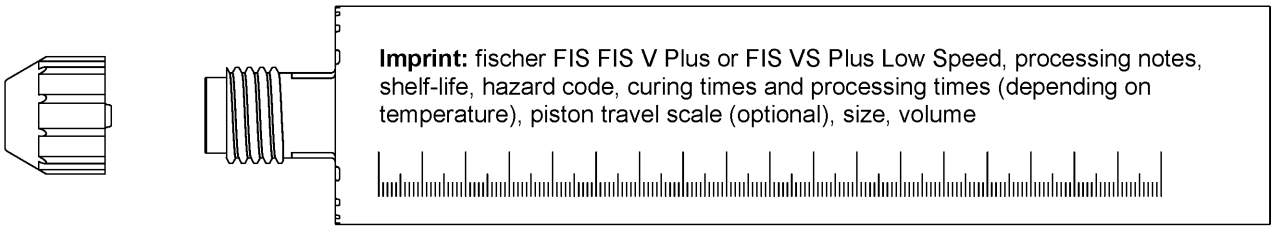

Static mixer FIS MR Plus for injection cartridges up to 410 ml

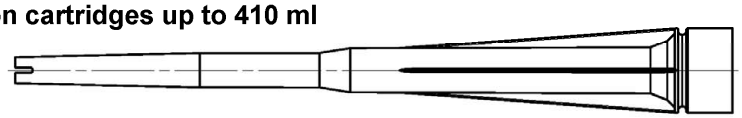

Static mixer FIS JMR for injection cartridges 825 ml

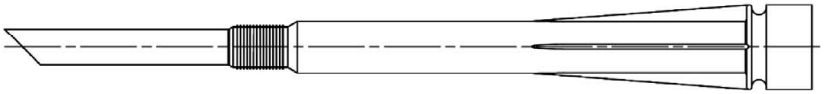

Injection adapter and extension tube Ø 9 for static mixer FIS MR Plus;
Injection adapter and extension tube Ø 9 or Ø 15 for static mixer FIS JMR

Reinforcing bar (rebar) Sizes: ϕ8, ϕ10, ϕ12, ϕ14, ϕ16, ϕ20, ϕ25, ϕ28

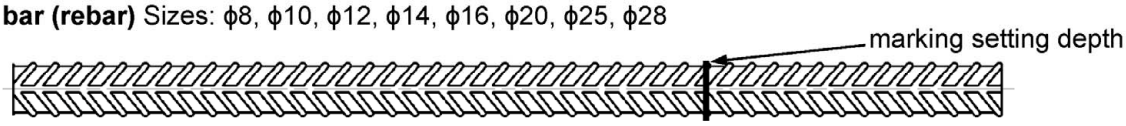

fischer rebar anchor FRA / FRA HCR Sizes: M12, M16, M20, M24

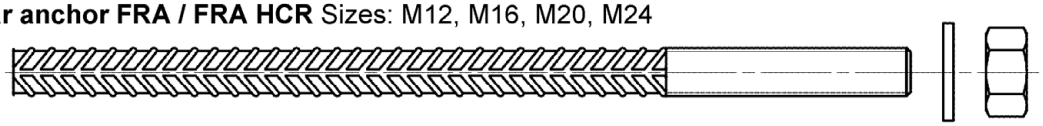

Blow out pump AB G

Compressed-air cleaning tool ABP with fischer compressed-air nozzle

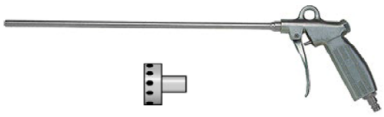

Figures not to scale

Rebar connection with injection system FIS V Plus

Product description
Overview system components; Injection mortar, static mixer, injection adapter, reinforcing bar, fischer rebar anchor FRA, cleaning tools

Annex A 4

Properties of reinforcing bars (rebar)

Figure A5.1:

- The minimum value of related rib area $f_{R,min}$ according to EN 1992-1-1:2011
- The maximum outer rebar diameter over the ribs shall be:
  - The nominal diameter of the bar with rib $\phi + 2 \cdot h$ ($h \leq 0{,}07 \cdot \phi$)
  - (ϕ: Nominal diameter of the bar; h_{rib} = rib height of the bar)

Table A5.1: Installation conditions for rebars

Nominal diameter of the bar		**ϕ**	**8[1)]**		**10[1)]**		**12[1)]**		**14**	**16**	**20**	**25[1)]**		**28**
Nominal drill hole diameter	d_0	[mm]	10	12	12	14	14	16	18	20	25	30	35	35
Drill hole depth	h_0		$h_0 = l_v$											
Effective embedment depth	l_v		acc. to static calculation											
Minimum thickness of concrete member	h_{min}		$l_v + 30$ (≥ 100)					$l_v + 2d_0$						

[1)] Both drill hole diameters can be used

Table A5.2: Materials of rebars

Designation	**Reinforcing bar (rebar)**
Reinforcing bar EN 1992-1-1:2011, Annex C	Bars and de-coiled rods class B or C with f_{yk} and k according to NDP or NCI of EN 1992-1-1/NA $f_{uk} = f_{tk} = k \cdot f_{yk}$

Figures not to scale

Rebar connection with injection system FIS V Plus

Product description
Properties and materials of reinforcing bars (rebar)

Annex A 5

Properties of fischer rebar anchors FRA

Figure A6.1:

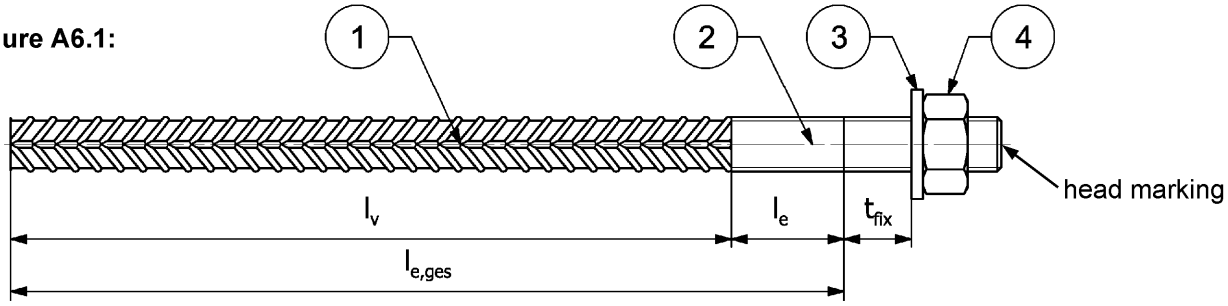

Head marking e.g.: FRA (for stainless steel)

FRA HCR (for high corrosion-resistant steel)

Table A6.1: Installation conditions for fischer rebar anchors FRA

Thread diameter				M12[2)]		M16	M20	M24[2)]	
Nominal diameter		ϕ	[mm]	12		16	20	25	
Nominal drill bit diameter		d_0	[mm]	14	16	20	25	30	35
Drill hole depth ($h_0 = l_{e,ges}$)		$l_{e,ges}$	[mm]	$l_v + l_e$					
Effective embedment depth		l_v	[mm]	according to static calculation					
Distance concrete surface to welded join		l_e	[mm]	100					
Maximum Diameter of clearance hole in the fixture[1)]	Pre-positioned	d_f	[mm]	14		18	22	26	
	Push through	d_f	[mm]	16	18	22	26	32	---
Minimum thickness of concrete member		h_{min}	[mm]	h_0+30		$h_0 + 2d_0$			
Maximum torque moment for attachment of the fixture		max T_{inst}	[Nm]	50		100	150	150	

[1)] For bigger clearance holes in the fixture see EN 1992-4:2018
[2)] Both drill bit diameters can be used

Table A6.2: Materials of fischer rebar anchors FRA

Part	Description	Materials	
		FRA Corrosion resistance class CRC III acc. to EN 1993-1-4:2006+A1:2015	FRA HCR Corrosion resistance class CRC V acc. to EN 1993-1-4: 2006+A1:2015
1	Reinforcing bar	Bars and de-coiled rods class B or C with f_{yk} and k according to NDP or NCI of EN 1992-1-1:NA; $f_{uk} = f_{tk} = k \cdot f_{yk}$; ($f_{yk}$ = 500 N/mm²)	
2	Round bar with partial or full thread	Stainless steel, strength class 80, according to EN 10088-1:2014	Stainless steel, strength class 80, according to EN 10088-1:2014
3	Washer ISO 7089:2000	Stainless steel, according to EN 10088-1:2014	Stainless steel, according to EN 10088-1:2014
4	Hexagon nut	Stainless steel, strength class 80, acc. to EN ISO 3506-2:2020, according to EN 10088-1:2014	Stainless steel, strength class 80, acc. to EN ISO 3506-2:2020, according to EN 10088-1:2014

Figures not to scale

Rebar connection with injection system FIS V Plus

Product description
Properties and materials of fischer rebar anchors FRA

Annex A 6

Specifications of intended use part 1

Table B1.1: Overview use and performance categories

Anchorages subject to		**FIS V Plus with …**			
		Reinforcing bar		fischer rebar anchor FRA	
Hammer drilling or compressed air drilling with standard drill bit		all sizes			
Hammer drilling with hollow drill bit (fischer “FHD”, Heller "Duster Expert", Bosch “Speed Clean“, Hilti "TE-CD, TE-YD")		Nominal drill bit diameter (d_0) 12 mm to 35 mm			
Use category I1	dry or wet concrete	all sizes			
Characteristic resistance under static and quasi static loading, in	uncracked concrete	all sizes	Tables: C1.1 C1.2 C1.3	all sizes	Tables: C1.1 C1.2 C1.3 C2.1 C2.2
	cracked concrete				
Characteristic resistance under seismic loading		---[1]		---[1]	
Installation direction		D3 (downward and horizontal and upwards (e.g. overhead))			
Installation temperature		$T_{i,min}$ = 0 °C to $T_{i,max}$ = +40 °C			
Service temperature	Temperature range	-40 °C to +80 °C		(max. short term temperature +80 °C; max long term temperature +50 °C)	
Resistance to fire		all sizes	Annex C 3	all sizes	Table C2.3

[1] No performance assessed

Rebar connection with injection system FIS V Plus

Intended use
Specifications part 1

Annex B 1

Specifications of intended use part 2

Anchorages subject to:

- Static and quasi-static loading: reinforcing bar (rebar) size 8 mm to 28 mm; FRA M12 to M24
- Resistance to fire: reinforcing bar (rebar) size 8 mm to 28 mm; FRA M12 to M24

Base materials:

- Compacted reinforced or unreinforced normal weight concrete without fibres according to EN 206:2013+A1:2016
- Concrete strength classes C12/15 to C50/60 according to EN 206:2013+A1:2016
- Maximum chloride content of 0,40 % (CL 0.40) related to the cement content according to EN 206:2013+A1:2016
- Non-carbonated concrete
  Note: In case of a carbonated surface of the existing concrete structure the carbonated layer shall be removed in the area of the post-installed rebar connection with a diameter of ϕ + 60 mm prior to the installation of the new rebar. The depth of concrete to be removed shall correspond to at least the minimum concrete cover in accordance with EN 1992-1-1 :2004+AC:2010. The foregoing may be neglected if building components are new and not carbonated and if building components are in dry conditions.

Use conditions (Environmental conditions) for fischer rebar anchors FRA

- For all conditions according to EN1993-1-4:2006+A1:2015 corresponding to corrosion resistance classes to **Annex A 6 Table A6.2**.

Design:

- Fastenings are designed under the responsibility of an engineer experienced in fastenings and concrete work.
- Verifiable calculation notes and drawings are prepared taking account of the forces to be transmitted.
- Design according to EN 1992-1-1:2011; EN 1992-1-2:2011 and **Annex B 3 and B 4**.
- The actual position of the reinforcement in the existing structure shall be determined on the basis of the construction documentation and taken into account when designing.

Installation:

- The installation of post-installed rebar respectively fischer rebar anchor FRA shall be done only by suitable trained installer and under Supervision on site; the conditions under which an installer may be considered as suitable trained and the conditions for Supervision on site are up to the Member States in which the installation is done.
- Check the position of the existing rebars (if the position of existing rebars is not known, it shall be determined using a rebar detector suitable for this purpose as well as on the basis of the construction documentation and then marked on the building component for the overlap joint).

Rebar connection with injection system FIS V Plus	**Annex B 2**
Intended use Specifications part 2	

General construction rules for post-installed rebars

Figure B3.1:

- Only tension forces in the axis of the rebar may be transmitted.
- The transfer of shear forces between new concrete and existing structure shall be designed additionally according to EN 1992-1-1:2011.
- The joints for concreting must be roughened to at least such an extent that aggregate protrude.

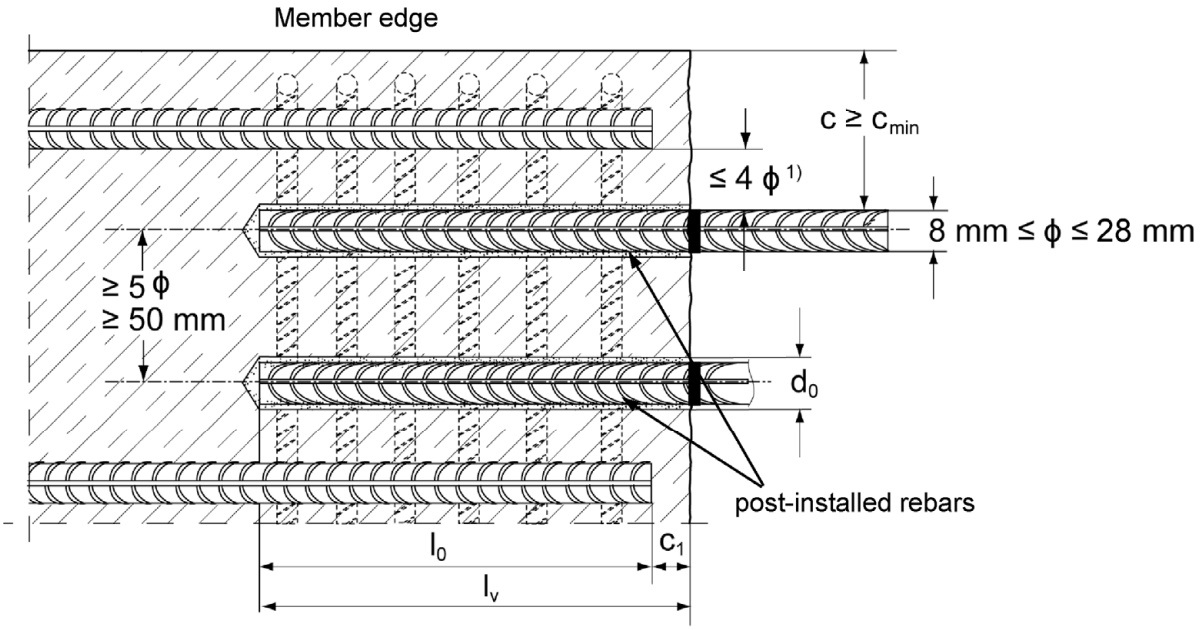

[1] If the clear distance between lapped bars exceeds 4 ϕ then the lap length shall be increased by the difference between the clear bar distance and 4 ϕ

c	concrete cover of post-installed rebar
c_1	concrete cover at end-face of existing rebar
c_{min}	minimum concrete cover according to **Table B5.1** and to EN 1992-1-1:2011, Section 4.4.1.2
ϕ	nominal diameter of reinforcing bar
l_0	lap length, according to EN 1992-1-1:2011
l_v	effective embedment depth, $\geq l_0 + c_1$
d_0	nominal drill bit diameter, see **Annex B 6**

Figures not to scale

Rebar connection with injection system FIS V Plus	**Annex B 3**
Intended use General construction rules for post-installed rebars	

General construction rules for post-installed fischer rebar anchors FRA

Figure B4.1:

- Only tension forces in the axis of the fischer rebar anchor FRA may be transmitted.
- The tension force must be transferred via an overlap joint to the reinforcement in the building part.
- The transmission of the shear load shall be ensured by appropriate additional measures, e.g. by shear lugs or by anchors with a European Technical Assessment (ETA).
- In the anchor plate, the holes for the tension anchor shall be executed as slotted holes with the axis in the direction of the shear force.

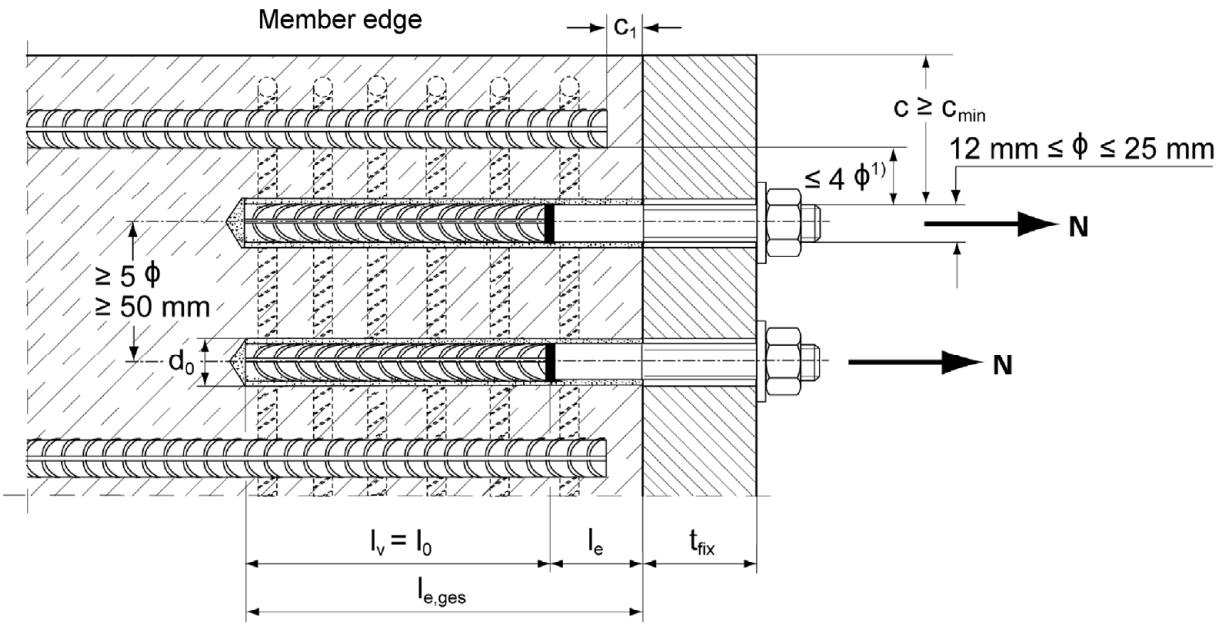

[1] If the clear distance between lapped bars exceeds 4 ϕ then the lap length shall be increased by the difference between the clear bar distance and 4 ϕ.

c	concrete cover of post-installed fischer rebar anchor FRA
c_1	concrete cover at end-face of existing rebar
c_{min}	minimum concrete cover according to **Table B5.1** and to EN 1992-1-1:2011, Section 4.4.1.2
ϕ	nominal diameter of reinforcing bar
l_0	lap length, according to EN 1992-1-1:2011, Section 8.7.3
$l_{e,ges}$	overall embedment depth, $\geq l_0 + l_e$
d_0	nominal drill bit diameter, see **Annex B 6**
l_e	length of the bonded in threaded part
t_{fix}	thickness of the fixture
l_v	effective embedment depth

Figures not to scale

Rebar connection with injection system FIS V Plus	**Annex B 4**
Intended use General construction rules for post-installed fischer rebar anchors FRA	

Table B5.1: **Minimum concrete cover** c_{min} [1] depending of the drilling method and the drilling tolerance

Drilling method	nominal diameter of reinforcing bar ϕ [mm]	Minimum concrete cover c_{min}	
		Without drilling aid [mm]	With drilling aid [mm]
Hammer drilling with standard drill bit or hollow drill bit	< 25	30 mm + 0,06 l_v ≥ 2 ϕ	30 mm + 0,02 l_v ≥ 2 ϕ
	≥ 25	40 mm + 0,06 l_v ≥ 2 ϕ	40 mm + 0,02 l_v ≥ 2 ϕ
Compressed air drilling	< 25	50 mm + 0,08 l_v	50 mm + 0,02 l_v
	≥ 25	60 mm + 0,08 l_v ≥ 2 ϕ	60 mm + 0,02 l_v ≥ 2 ϕ

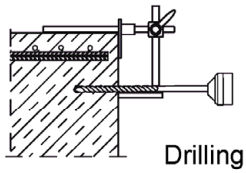

[1] See Annex B 3, figure B3.1 and Annex B 4, figure B4.1
Note: The minimum concrete cover as specified in EN 1992-1-1:2011 must be observed.

Table B5.2: Dispensers and cartridge sizes corresponding to maximum embedment depth $l_{v,max}$

reinforcing bars (rebar)	fischer rebar anchor FRA	Manual dispenser	Accu and pneumatic dispenser (small)	Accu and pneumatic dispenser (large)
		Cartridge size		
		< 500 ml		> 500 ml
ϕ [mm]	thread [-]	$l_{v,max}$ / $l_{e,ges,max}$ [mm]		$l_{v,max}$ / $l_{e,ges,max}$ [mm]
8	---	1000	1000	1800
10	---			
12	FRA M12 FRA HCR M12		1200	
14	---			
16	FRA M16 FRA HCR M16		1500	
20	FRA M20 FRA HCR M20	700	1300	
25	FRA M24 FRA HCR M24		1000	2000
28	---	700	700	

Table B5.3: Conditions for use **static mixer** without an **extension tube**

Nominal drill hole diameter		d_0	[mm]	10	12	14	16	18	20	25	30	35
Drill hole depth h_0 by using	FIS MR Plus			≤ 90		≤ 120	≤ 140	≤ 150	≤ 160	≤ 210		
	FIS JMR			-	-	≤ 90	≤ 160	≤ 180	≤ 190	≤ 220	≤ 250	

Rebar connection with injection system FIS V Plus

Intended use
Minimum concrete cover;
dispenser and cartridge sizes corresponding to maximum embedment depth

Annex B 5

Table B6.1: Working times t_{work} and curing times t_{cure}

Temperature in the anchorage base [°C]	Maximum working time[1] t_{work}		Minimum curing time[2] t_{cure}	
	FIS V Plus	**FIS VS Plus Low Speed**	**FIS V Plus**	**FIS VS Plus Low Speed**
0 to 5 [3]	13 min	---	3 h	6 h
> 5 to 10 [3]	9 min	20 min	90 min	3 h
> 10 to 20	5 min	10 min	60 min	2 h
> 20 to 30	4 min	6 min	45 min	60 min
> 30 to 40 [4]	2 min	4 min	35 min	60 min

[1] Maximum time from the beginning of the injection to rebar / fischer rebar anchor FRA setting and positioning.
[2] For wet concrete the curing time must be doubled.
[3] If the temperature in the concrete falls below 10 °C the cartridge must be warmed up to +15 °C.
[4] If the temperature in the concrete exceeds 30 °C the cartridge must be cooled down to +15 °C up to 20 °C.

Table B6.2: Installation tools for drilling and cleaning the bore hole and injection of the mortar

reinforcing bars (rebar)	fischer rebar anchor FRA	Drilling and cleaning				Injection	
		Nominal drill bit diameter	Diameter of cutting edge	Steel brush diameter	Diameter of fischer compressed-air nozzle	Diameter of extension tube	Injection adapter
ϕ [mm]	Designation	d_0 [mm]	d_{cut} [mm]	d_b [mm]	[mm]	[mm]	[colour]
8[1]	---	10	≤ 10,50	11,0	---	9	---
		12	≤ 12,50	12,5	11		nature
10[1]	---	12	≤ 12,50	12,5			
		14	≤ 14,50	15			blue
12[1]	FRA M12[1] FRA HCR M12[1]	14	≤ 14,50	15	15		
		16	≤ 16,50	17			red
14	---	18	≤ 18,50	19		9 or 15	yellow
16	FRA M16 FRA HCR M16	20	≤ 20,55	21,5	19		green
20	FRA M20 FRA HCR M20	25	≤ 25,55	26,5			black
25[1]	FRA M24[1] FRA HCR M24[1]	30	≤ 30,55	32	28		grey
		35	≤ 35,70	37			brown
28	---	35	≤ 35,70	37			brown

[1] Both drill bit diameters can be used.

Rebar connection with injection system FIS V Plus

Intended use
Working times and curing times;
Installation tools for drilling and cleaning the bore hole and injection of the mortar

Annex B 6

Safety regulations

Review the Safety Data Sheet (SDS) before use for proper and safe handling!
Wear well-fitting protective goggles and protective gloves when working with mortar FIS V Plus / FIS VS Plus Low Speed.
Important: Observe the instructions for use provided with each cartridge.

Installation instruction part 1; Installation with FIS V Plus / FIS VS Plus Low Speed

Hole drilling

Note: Before drilling, remove carbonized concrete; clean contact areas (see **Annex B 2**)
In case of aborted drill holes the drill hole shall be filled with mortar.

1a	**Hammer drilling or compressed air drilling** 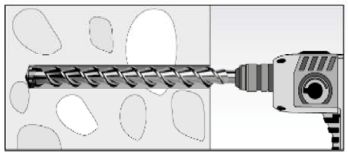	Drill the hole to the required embedment depth using a hammer drill with carbide drill bit set in rotation hammer mode or a pneumatic drill. Drill bit sizes see **Table B6.2**.
1b	**Hammer drilling with hollow drill bit** 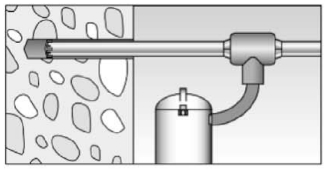	Drill the hole to the required embedment depth using a hammer drill with hollow drill bit in rotation hammer mode. Dust extraction conditions see drill hole cleaning **Annex B 8**. Drill bit sizes see **Table B6.2**.
2	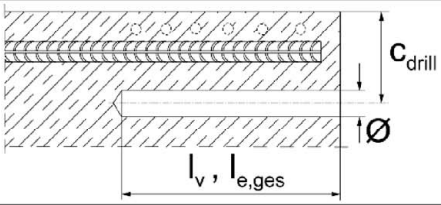	Measure and control concrete cover c (c_{drill} = c + Ø / 2) Drill parallel to surface edge and to existing rebar. Where applicable use drilling aid.
	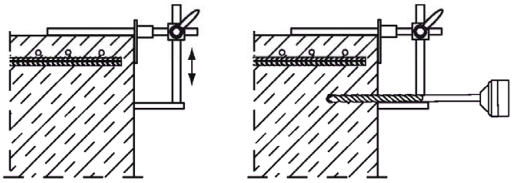	For holes l_v > 20 cm use drilling aid. Three different options can be considered: A) drilling aid B) Slat or spirit level C) Visual check Minimum concrete cover c_{min} see **Table B5.1.**

Rebar connection with injection system FIS V Plus

Intended use
Safety regulations; Installation instruction part 1, hole drilling

Annex B 7

Installation instruction part 2; Installation with FIS V Plus / FIS VS Plus Low Speed

Drill hole cleaning

3a

Hammer or compressed air drilling

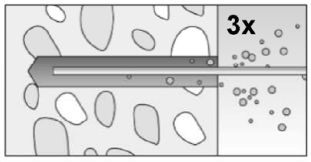

Clean the drill hole:
For d_0 < 18 mm and depths l_v resp. $l_{e,ges} \leq 12 \cdot \phi$ blow out the hole three times by hand.

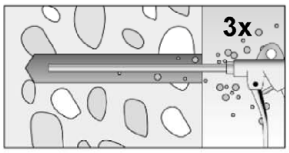

For d_0 > 18 mm and depths l_v resp. $l_{e,ges} > 12 \cdot \phi$ blow out the hole three times with oil-free compressed air (p ≥ 6 bar). Use suitable compressed-air nozzle (see **Table B6.2**).

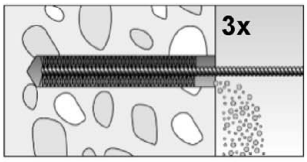

Brush drill hole three times; for drill hole diameters d_0 ≥ 30 mm attach brush to a power tool and brush hole with a speed of max. 550 revolutions per minute.
For deep holes a brush extension is mandatory.
Use suitable brushes (see **Table B6.2**).

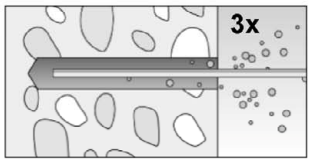

Clean the drill hole:
For d_0 < 18 mm and depths l_v resp. $l_{e,ges} \leq 12 \cdot \phi$ blow out the hole three times by hand.

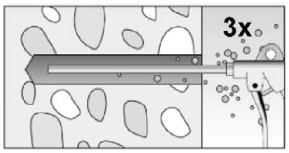

For d_0 > 18 mm and depths l_v resp. $l_{e,ges} > 12 \cdot \phi$ blow out the hole three times with oil-free compressed air (p ≥ 6 bar) Use suitable compressed-air nozzle (see **Table B6.2**).

3b

Hammer drilling with hollow drill bit

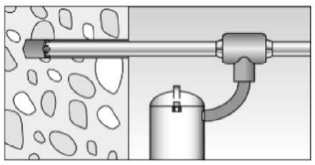

Use a suitable dust extraction system, e. g.
fischer FVC 35 M or a comparable dust extraction system with equivalent performance data.
Drill the hole with hollow drill bit. The dust extraction system has to extract the drill dust nonstop during the drilling process and must be adjusted to maximum power.
No further drill hole cleaning necessary.

Rebar connection with injection system FIS V Plus

Intended use
Installation instruction part 2, drill hole cleaning

Annex B 8

Installation instruction part 3; Installation with FIS V Plus / FIS VS Plus Low Speed

reinforcing bars (rebar) / fischer rebar anchor FRA and cartridge preparation

4	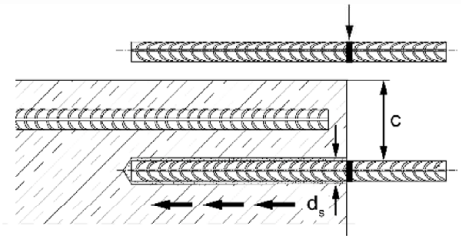	Before use, make asure that the rebar or the fischer rebar anchor FRA is dry and free of oil or other residue. Mark the embedment depth l_v (e.g. with tape) Insert rebar in borehole, to verify drill hole depth and setting depth l_v resp. $l_{e,ges.}$
5	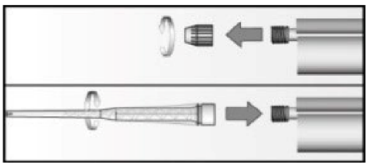	Twist off the sealing cap Twist on the static mixer (the spiral in the static mixer must be clearly visible).
6	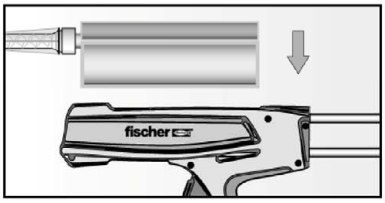	Place the cartridge into a suitable dispenser.
7	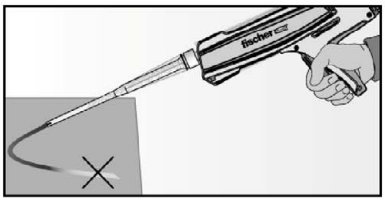	Press out approximately 10 cm of mortar until the resin is permanently grey in colour. Mortar which is not grey in colour will not cure and must be disposed.

Rebar connection with injection system FIS V Plus	**Annex B 9**
Intended use Installation instruction part 3, reinforcing bars (rebar) / fischer rebar anchor FRA and cartridge preparation	

Installation instruction part 4; Installation with FIS V Plus / FIS VS Plus Low Speed

Injection of the mortar without extension tube

8a

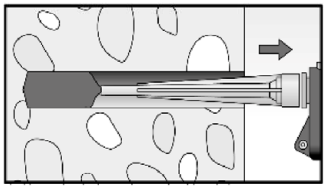

Inject the mortar from the back of the hole towards the front and slowly withdraw the static mixer step by step with each trigger pull.
Avoid bubbles.
Fill holes approximately 2/3 full, to ensure that the annular gap between the rebar and the concrete will be completely filled with adhesive over the entire embedment length.
The conditions for mortar injection without extension tube can be found in **Table B5.3**.

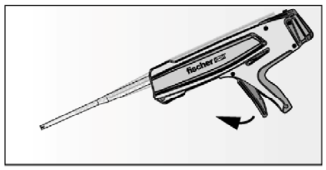

After injecting, release the dispenser. This will prevent further mortar discharge from the static mixer.

Injection of the mortar with extension tube

8b

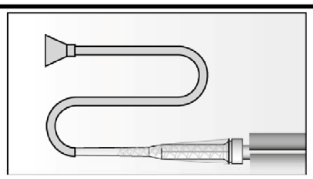

Assemble mixing nozzle FIS MR Plus or FIS JMR, extension tube and appropriate injection adapter (see **Table B6.2**).

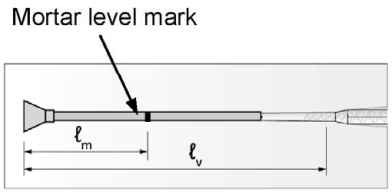

Mark the required mortar level l_m and embedment depth l_v resp. $l_{e,ges}$ with tape or marker on the injection extension tube.

a) Estimation:

$$l_m = \frac{1}{3} \cdot l_v \; resp. \; l_m = \frac{1}{3} \cdot l_{e,ges} \text{ [mm]}$$

b) Precise equation for optimum mortar volume:

$$l_m = l_v \; resp. \; l_{e,ges} \left(\left(1{,}2 \cdot \frac{d_s^2}{d_0^2} - 0{,}2\right) \right) \text{ [mm]}$$

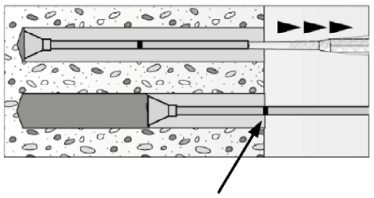

Insert injection adapter to back of the hole. Begin injection allowing the pressure of the injected adhesive mortar to push the injection adapter towards the front of the hole. Do not actively pull out!
Fill holes approximately 2/3 full, to ensure that the annular gap between the rebar and the concrete will be completely filled with adhesive over the embedment length.
When using an injection adapter continue injection until the mortar level mark l_m becomes visible.
Maximum embedment depth see **Table B5.2**.

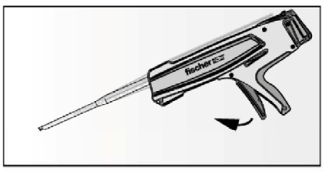

After injecting, release the dispenser. This will prevent further mortar discharge from static mixer.

Rebar connection with injection system FIS V Plus	**Annex B 10**
Intended use Installation instruction part 4, mortar injection	

Installation instruction part 5; Installation with FIS V Plus / FIS VS Plus Low Speed

Insert rebar / fischer rebar anchor FRA

9	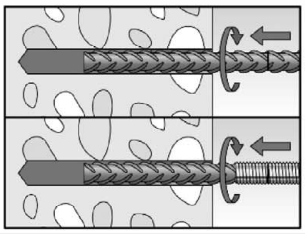	Insert the rebar / fischer rebar anchor FRA slowly twisted into the borehole until the embedment mark is reached. Recommendation: Rotation back and forth of the reinforcement bar or the fischer rebar anchor FRA makes pushing easy.
10	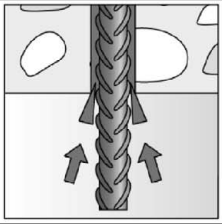	For overhead installation, support the rebar / fischer rebar anchor FRA and secure it from falling till mortar started to harden, e.g. using wedges.
11	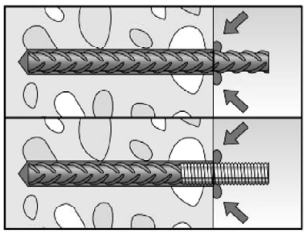	After installing the rebar or fischer rebar anchor FRA the annular gap must be completely filled with mortar. Proper installation • Desired embedment depth is reached l_v, resp. $l_{e,ges}$: embedment mark at concrete surface • Excess mortar flows out of the borehole after the rebar has been fully inserted up to the embedment mark.
12		Observe the working time "t_{work}" (**see Table B6.1**), which varies according to temperature of base material. Minor adjustments to the rebar / fischer rebar anchor FRA position may be performed during the working time Full load may be applied only after the curing time "t_{cure}" has elapsed (**see Table B 6.1**).
13	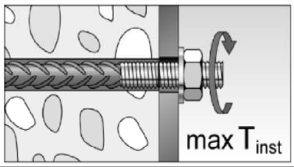	Mounting the fixture for fischer rebar anchor FRA, max T_{inst} see T**able A6.1**.

Rebar connection with injection system FIS V Plus	**Annex B 11**
Intended use Installation instruction part 5, insert rebar / fischer rebar anchor FRA	

Minimum anchorage length and minimum lap length

The minimum anchorage length $l_{b,min}$ and the minimum lap length $l_{0,min}$ according to EN 1992-1-1:2011 shall be multiplied by the relevant amplification factor α_{lb} according to **Table C1.1.**

Table C1.1: Amplification factor α_{lb} related to concrete strength class and drilling method

Hammer drilling, hollow drilling and compressed air drilling

Rebar / fischer rebar anchor FRA	Amplification factor α_{lb}								
	Concrete strength class								
ϕ [mm]	C12/15	C16/20	C20/25	C25/30	C30/37	C35/45	C40/50	C45/55	C50/60
8 to 25	1,0						1,1		1,2
28	1,0								

Table C1.2: Bond efficiency factor k_b related to concrete strength class and drilling method

Hammer drilling, hollow drilling and compressed air drilling

Rebar / fischer rebar anchor FRA	Bond efficiency factor k_b								
	Concrete strength class								
ϕ [mm]	C12/15	C16/20	C20/25	C25/30	C30/37	C35/45	C40/50	C45/55	C50/60
8 to 25	1,00								
28	1,00						0,91	0,84	0,84

Table C1.3: Design values of the bond strength $f_{bd,PIR}$ in N/mm² related to concrete strength class and drilling method for good bond conditions

$$f_{bd,PIR} = k_b \cdot f_{bd}$$

f_{bd}: Design value of the bond strength in N/mm² considering the concrete strength classes and the rebar diameter for good bond condition (for all other bond conditions multiply the values by η_1 = 0,7)
and recommended partial factor γ_c = 1,5 according to EN 1992-1-1:2011

k_b: Bond efficiency factor according to **Table C1.2**

Hammer drilling, hollow drilling and compressed air drilling

Rebar / fischer rebar anchor FRA	Bond strength $f_{bd,PIR}$ [N/mm²]								
	Concrete strength class								
ϕ [mm]	C12/15	C16/20	C20/25	C25/30	C30/37	C35/45	C40/50	C45/55	C50/60
8 to 25	1,6	2,0	2,3	2,7	3,0	3,4	3,7	4,0	4,3
28	1,6	2,0	2,3	2,7	3,0	3,4	3,4	3,4	3,7

Rebar connection with injection system FIS V Plus

Performance
Amplification factor α_{lb}, bond efficiency factor k_b,
design values of the bond strength $f_{bd,PIR}$

Annex C 1

Table C2.1: Characteristic **tensile yield strength** for rebar part of **fischer rebar anchors FRA**

fischer rebar anchor FRA / FRA HCR			**M12**	**M16**	**M20**	**M24**
Characteristic tensile yield strength for rebar part						
Rebar diameter	ϕ	[mm]	12	16	20	25
Characteristic tensile yield strength for rebar	f_{yk}	[N/mm²]	500	500	500	500
Partial factor for rebar part	$\gamma_{Ms,N}$ [1)]	[-]	1,15			

[1)] In absence of national regulations

Table C2.2: Characteristic resistance to **steel failure** under tension loading of **fischer rebar anchors FRA**

fischer rebar anchor FRA / FRA HCR			**M12**	**M16**	**M20**	**M24**
Characteristic resistance to steel failure under tension loading						
Characteristic resistance	$N_{Rk,s}$	[kN]	62	111	173	263
Partial factor						
Partial factor	$\gamma_{Ms,N}$ [1)]	[-]	1,4			

[1)] In absence of national regulations

Table C2.3: Characteristics resistance to **steel failure** for **fischer rebar anchors FRA** under tension loading and fire exposure R30 to R120

fischer rebar anchor FRA / FRA HCR				**M12**	**M16**	**M20**	**M24**
Characteristic resistance to steel failure under tension loading and fire exposure	R30	$N_{Rk,s,fi}$	[kN]	2,5	4,7	7,4	10,6
	R60			2,1	3,9	6,1	8,8
	R90			1,7	3,1	4,9	7,1
	R120			1,3	2,5	3,9	5,6

Rebar connection with injection system FIS V Plus

Performance
Characteristic tensile yield strength for rebar part of FRA; Design value of the steel bearing capacity $N_{Rk,s,fi}$ under fire exposure for fischer rebar anchor FRA

Annex C 2

Design value of the ultimate bond strength $f_{bd,fi}$ at increased temperature for concrete strength classes C12/15 to C50/60 (all drilling methods)

The design value of the bond strength $f_{bd,fi}$ at increased temperature has to be calculated by the following equation:

$$f_{bd,fi} = k_{fi}(\theta) \cdot f_{bd,PIR} \cdot \frac{\gamma_c}{\gamma_{m,fi}}$$

If: $\theta > 74$ °C $\quad k_{fi}(\theta) = \frac{24{,}308 \cdot e^{-0{,}012 \cdot \theta}}{f_{bd,PIR} \cdot 4{,}3} \leq 1{,}0$

If: $\theta > \theta_{max}$ (317 °C) $\quad k_{fi}(\theta) = 0$

$f_{bd,fi}$ = Design value of the ultimate bond strength at increased temperature in N/mm²

θ = Temperature in °C in the mortar layer

$k_{fi}(\theta)$ = Reduction factor at increased temperature

$f_{bd,PIR}$ = Design value of the bond strength in N/mm² in cold condition according to **Table C1.3** considering the concrete strength classes, the rebar diameter, the drilling method and the bond conditions according to EN 1992-1-1:2011

γ_C = 1,5 recommended partial factor according to EN 1992-1-1:2011

$\gamma_{m,fi}$ = 1,0 recommended partial factor

For evidence at increased temperature the anchorage length shall be calculated according to EN 1992-1-1:2011 Equation 8.3 using the temperature-dependent ultimate design value of bond strength $f_{bd,fi}$.

Figure C3.1: Example graph of reduction factor $k_{fi}(\theta)$ for concrete class C20/25 for good bond conditions

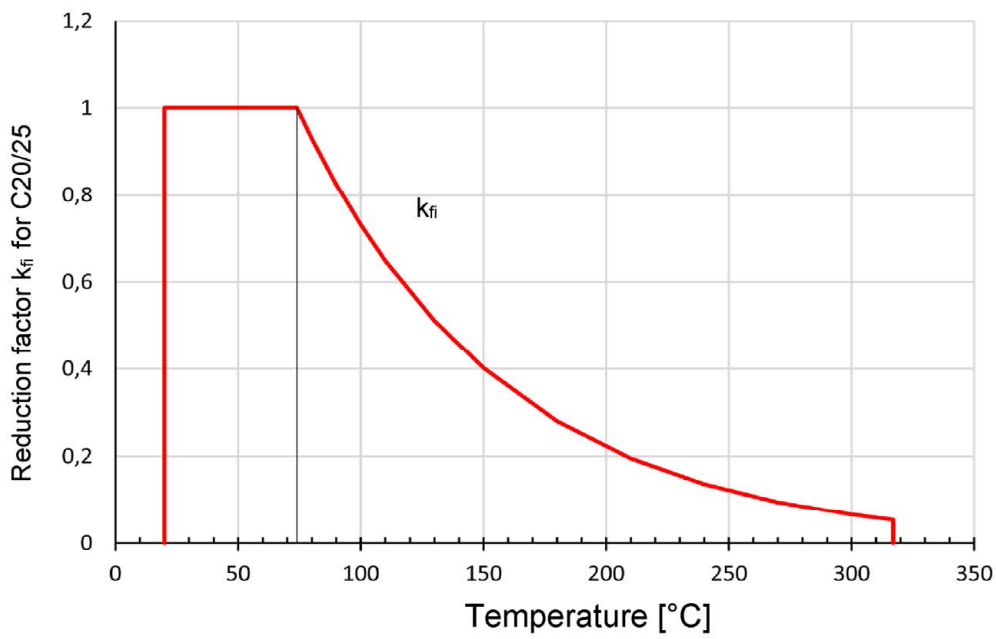

Rebar connection with injection system FIS V Plus	Annex C 3
Performance Design value of bond strength $f_{bd,fi}$ at increased temperature	

Deutsches Institut für Bautechnik DIBt

Member of EOTA
www.eota.eu

Approval body for construction products and types of construction

Bautechnisches Prüfamt

An institution established by the Federal and Laender Governments

Designated according to Article 29 of Regulation (EU) No 305/2011 and member of EOTA (European Organisation for Technical Assessment)

European Technical Assessment

ETA-20/0729 of 26 November 2020

English translation prepared by DIBt - Original version in German language

General Part

Technical Assessment Body issuing the European Technical Assessment:	Deutsches Institut für Bautechnik
Trade name of the construction product	fischer injection system FIS V Plus for masonry
Product family to which the construction product belongs	Metal Injection anchors for use in masonry
Manufacturer	fischerwerke GmbH & Co. KG Otto-Hahn-Straße 15 79211 Denzlingen DEUTSCHLAND
Manufacturing plant	fischerwerke
This European Technical Assessment contains	139 pages including 3 annexes which form an integral part of this assessment
This European Technical Assessment is issued in accordance with Regulation (EU) No 305/2011, on the basis of	EAD 330076-00-0604, Edition 11/2017

Electronic copy of the ETA by DIBt: ETA-20/0729

The European Technical Assessment is issued by the Technical Assessment Body in its official language. Translations of this European Technical Assessment in other languages shall fully correspond to the original issued document and shall be identified as such.

Communication of this European Technical Assessment, including transmission by electronic means, shall be in full. However, partial reproduction may only be made with the written consent of the issuing Technical Assessment Body. Any partial reproduction shall be identified as such.

This European Technical Assessment may be withdrawn by the issuing Technical Assessment Body, in particular pursuant to information by the Commission in accordance with Article 25(3) of Regulation (EU) No 305/2011.

Electronic copy of the ETA by DIBt: ETA-20/0729

Specific Part

1 Technical description of the product

The fischer injection system FIS V Plus for masonry is a bonded anchor (injection type) consisting of a mortar cartridge with injection mortar fischer FIS V Plus, FIS VS Plus Low Speed and FIS VW Plus High Speed, a perforated sieve sleeve and an anchor rod with hexagon nut and washer or an internal threaded rod in the range of M6 to M16. The steel elements are made of zinc coated steel, stainless steel or high corrosion resistant steel.

The anchor rod is placed into a drilled hole filled with injection mortar and is anchored via the bond between steel element, injection mortar and masonry and mechanical interlock.

The product description is given in Annex A.

2 Specification of the intended use in accordance with the applicable European Assessment Document

The performances given in Section 3 are only valid if the anchor is used in compliance with the specifications and conditions given in Annex B.

The verifications and assessment methods on which this European Technical Assessment is based lead to the assumption of a working life of the anchor of at least 50 years. The indications given on the working life cannot be interpreted as a guarantee given by the producer, but are to be regarded only as a means for choosing the right products in relation to the expected economically reasonable working life of the works.

3 Performance of the product and references to the methods used for its assessment

3.1 Mechanical resistance and stability (BWR 1)

Essential characteristic	Performance
Characteristic values for resistance	See Annexes B20, C 1 to C 110
Displacements	See Annex C 110
Durability	See annex B 2

3.2 Safety in case of fire (BWR 2)

Essential characteristic	Performance
Reaction to fire	Class A1

3.3 Hygiene, health and the environment (BWR 3)

Essential characteristic	Performance
Content, emission and/or release of dangerous substances	No performance assessed

4 Assessment and verification of constancy of performance (AVCP) system applied, with reference to its legal base

In accordance with the European Assessment Document EAD 330076-00-0604 the applicable European legal act is: [97/177/EC].

The system to be applied is: 1

Electronic copy of the ETA by DIBt: ETA-20/0729

5 Technical details necessary for the implementation of the AVCP system, as provided for in the applicable European Assessment Document

Technical details necessary for the implementation of the AVCP system are laid down in the control plan deposited at Deutsches Institut für Bautechnik.

Issued in Berlin on 26 November 2020 by Deutsches Institut für Bautechnik

Dipl.-Ing. Beatrix Wittstock
Head of Section

beglaubigt:
Baderschneider

Electronic copy of the ETA by DIBt: ETA-20/0729

Installation conditions part 1

Anchor rods with perforated sleeve FIS H K; Installation in perforated and solid brick masonry

Pre-positioned anchorage:

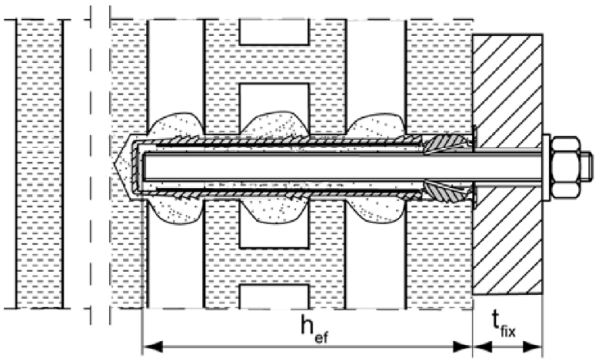

Installation with render bridge

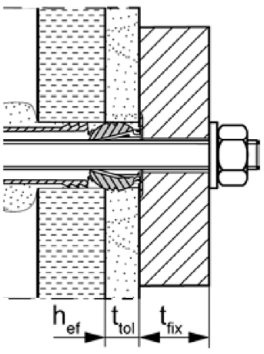

Size of the perforated sleeve: FIS H 12x50 K, FIS H 12x85 K, FIS H 16x85 K, FIS H 16x130 K, FIS H 20x85 K, FIS H 20x130 K, FIS H 20x200 K

Push through anchorage:

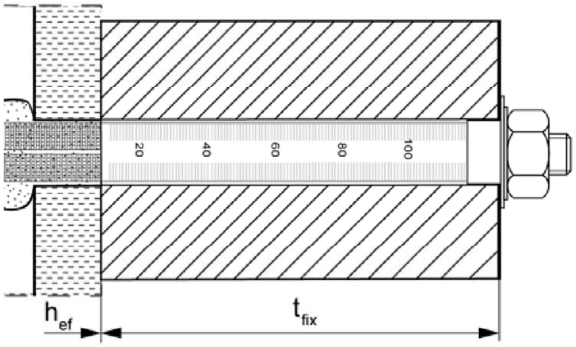

Installation with render bridge

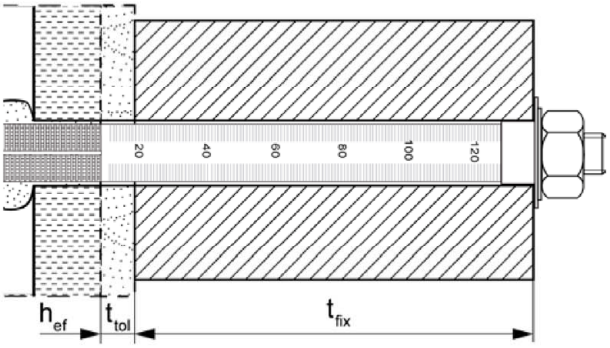

Size of the perforated sleeve: FIS H 18x130/200 K, FIS H 22x130/200 K

Internal threaded anchor FIS E with perforated sleeve FIS H K;
Installation in perforated and solid brick masonry

Pre-positioned anchorage:

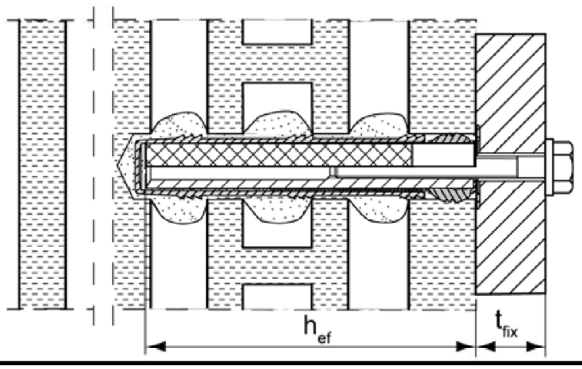

Installation with render bridge

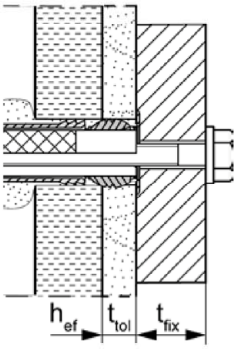

Pictures not to scale

h_{ef} = effective anchorage depth

t_{fix} = thickness of fixture

t_{tol} = thickness of unbearing layer (e.g. plaster)

fischer injection system FIS V Plus for masonry

Product description
Installation conditions part 1,
Anchor rods and internal threaded anchor with perforated sleeve

Annex A 1

Electronic copy of the ETA by DIBt: ETA-20/0729

Installation conditions part 2

Anchor rods without perforated sleeve FIS H K;
installation in solid brick masonry and autoclaved aerated concrete

Pre-positioned anchorage:

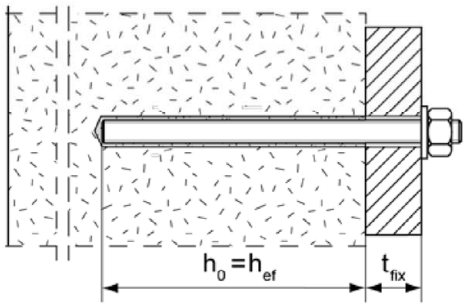

Push through anchorage: Annular gap filled with mortar

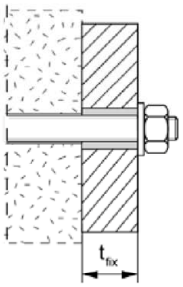

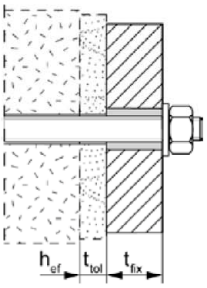

Installation with render bridge

Internal threaded anchors FIS E without perforated sleeve FIS H K;
installation in solid brick masonry and autoclaved aerated concrete

Pre-positioned anchorage:

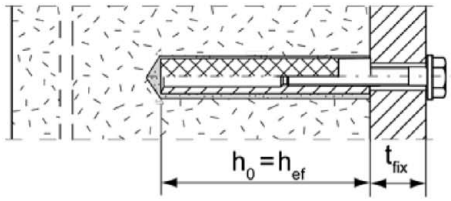

Installation with render bridge

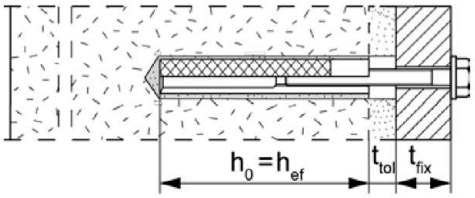

Anchor rods and internal threaded anchors FIS E without perforated sleeve FIS H K; installation with centring sleeve in autoclaved aerated concrete with conical drill hole
(installation with special conic drill bit PBB)

Pre-positioned anchorage:
anchor rods M8, M10, M12

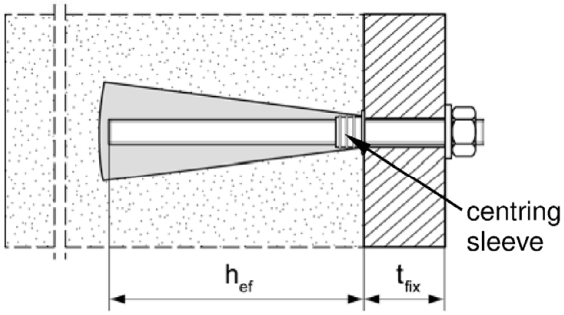

Pre-positioned anchorage:
Internal threaded anchor FIS E 11x85 M6 / M8

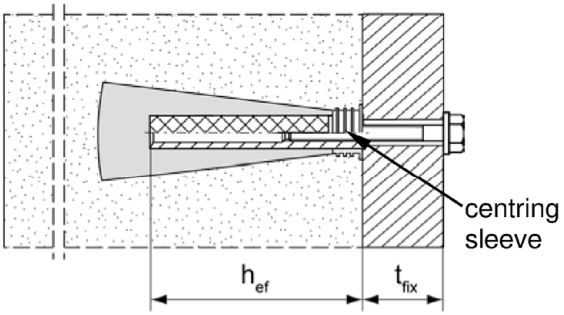

Pictures not to scale

h_0 = depth of drill hole
h_{ef} = effective anchorage depth
t_{tol} = thickness of unbearing layer (e.g. plaster)
t_{fix} = thickness of fixture

fischer injection system FIS V Plus for masonry

Product description
Installation conditions part 2, Anchor rods and internal threaded anchor without perforated sleeve / with centring sleeve

Annex A 2

Electronic copy of the ETA by DIBt: ETA-20/0729

Overview system components part 1

Mortar cartridge (shuttle cartridge) with sealing cap

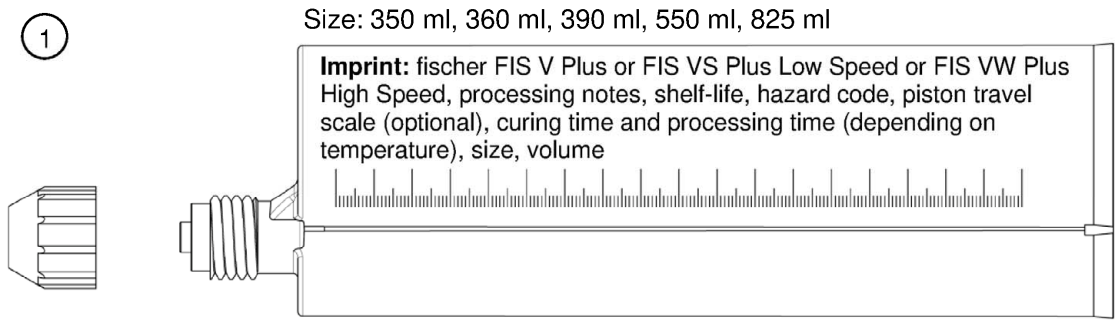

Mortar cartridge (coaxial cartridge) with sealing cap

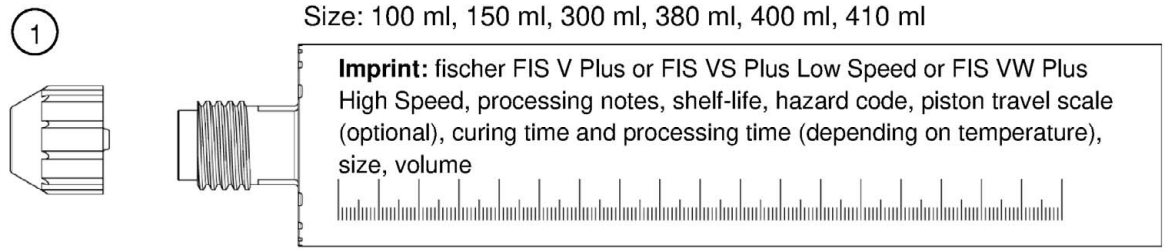

Static mixer MR Plus with injection adapter and center sleeve for aerated concrete

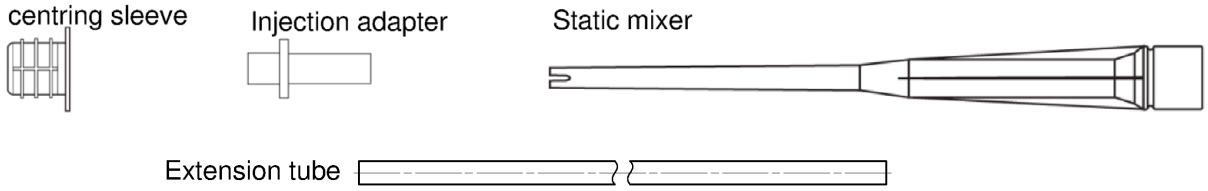

Cleaning brush BS

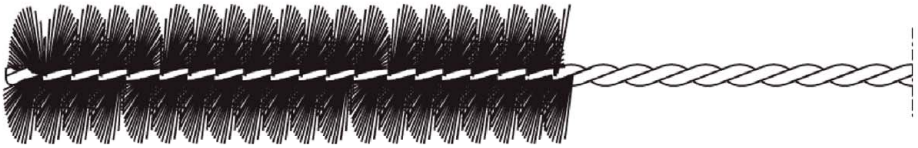

Blow-out pump ABG or ABP

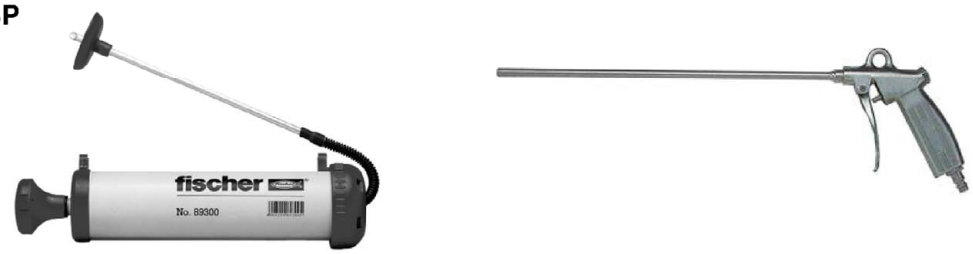

Pictures not to scale

fischer injection system FIS V Plus for masonry	**Annex A 3**
Product description Overview system components part 1: cartridge / static mixer / cleaning tools	

Electronic copy of the ETA by DIBt: ETA-20/0729

Overview system components part 2

fischer anchor rod

(2)

Size: M6, M8, M10, M12, M16

Internal threaded anchor FIS E

(5)

Size: 11x85 M6 / M8
15x85 M10 / M12

Perforated sleeve FIS H K

(7) 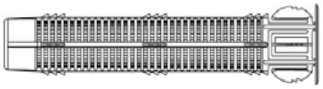

Size: FIS H 12x50 K
FIS H 12x85 K
FIS H 16x85 K
FIS H 20x85 K

(7)

Size: FIS H 16x130 K
FIS H 20x130 K
FIS H 20x200 K

Perforated sleeve FIS H K (push through anchorage)

(7) 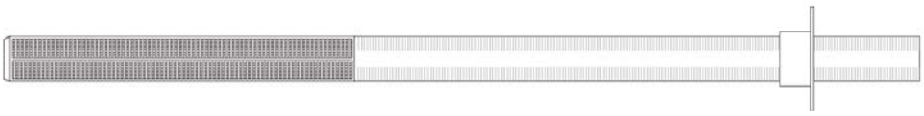

Size:
FIS H 18x130/200 K
FIS H 22x130/200 K

Washer

(3) 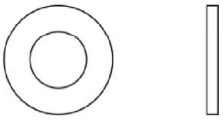

Hexagon nut

(4)

Pictures not to scale

fischer injection system FIS V Plus for masonry

Product description
Overview system components part 2: steel parts / perforated sleeve

Annex A 4

Electronic copy of the ETA by DIBt: ETA-20/0729

Table A5.1: Materials

Part	Designation	Material		
1	Mortar cartridge	Mortar, hardener; filler		
		Steel	Stainless steel R	High corrosion-resistant steel HCR
		zinc plated	acc. to EN 10088-1:2014 Corrosion resistance class CRC III acc. to EN 1993-1-4:2015	acc. to EN 10088-1:2014 Corrosion resistance class CRC V acc. to EN 1993-1-4:2015
2	Anchor rod	Property class 4.6; 4.8; 5.8 oder 8.8; EN ISO 898-1: 2013 zinc plated ≥ 5µm, ISO 4042:2018 Zn5/An(A2K) or hot-dip galvanised EN ISO 10684:2004 f_{uk} ≤ 1000 N/mm² A_5 > 8% fracture elongation	Property class 50, 70 or 80 EN ISO 3506-1:2009 1.4401; 1.4404; 1.4578; 1.4571; 1.4439; 1.4362; 1.4062; 1.4662; 1.4462; EN 10088-1:2014 f_{uk} ≤ 1000 N/mm² A_5 > 8% fracture elongation	Property class 50 or 80 EN ISO 3506-1:2009 or property class 70 with f_{yk}= 560 N/mm² 1.4565; 1.4529 EN 10088-1:2014 f_{uk} ≤ 1000 N/mm² A_5 > 8% fracture elongation
3	Washer ISO 7089:2000	zinc plated ≥ 5µm, ISO 4042:2018 Zn5/An(A2K) or hot-dip galvanised EN ISO 10684:2004	1.4401; 1.4404; 1.4578; 1.4571; 1.4439; 1.4362; EN 10088-1:2014	1.4565;1.4529 EN 10088-1:2014
4	Hexagon nut	Property class 5 or 8; EN ISO 898-2:2012 zinc plated ≥ 5µm, ISO 4042:2018 Zn5/An(A2K) or hot-dip galvanised ISO 10684:2004	Property class 50, 70 or 80 EN ISO 3506-1:2009 1.4401; 1.4404; 1.4578; 1.4571; 1.4439; 1.4362; EN 10088-1:2014	Property class 50, 70 or 80 EN ISO 3506-1:2009 1.4565; 1.4529 EN 10088-1:2014
5	Internal threaded anchor FIS E	Property class 5.8; EN 10277-1:2008-06 zinc plated ≥ 5µm, ISO 4042:2018 Zn5/An(A2K)	Property class 70 EN ISO 3506-1:2009 1.4401; 1.4404; 1.4578; 1.4571; 1.4439; 1.4362; EN 10088-1:2014	Property class 70 EN ISO 3506-1:2009 1.4565; 1.4529 EN 10088-1:2014
6	Commercial standard screw or threaded rod for internal threaded anchor FIS E	Property class 5.8 or 8.8; EN ISO 898-1:2013 zinc plated ≥ 5µm, ISO 4042:2018 Zn5/An(A2K)	Property class 70 EN ISO 3506-1:2009 1.4401; 1.4404; 1.4578; 1.4571; 1.4439; 1.4362; EN 10088-1:2014	Property class 70 EN ISO 3506-1:2009 1.4565; 1.4529 EN 10088-1:2014
7	Perforated sleeve and centring sleeve	PP / PE		

fischer injection system FIS V Plus for masonry

Product description
Materials

Annex A 5

Electronic copy of the ETA by DIBt: ETA-20/0729

Specifications of intended use (part 1)

Table B1.1: Overview use and performance categories

Anchorages subject to		**fischer injection system FIS V Plus for masonry**	
Hole drilling with hammer drill mode		all bricks; without C28 to C48, C75 to C78	
Hole drilling with rotary drill mode		all bricks	
Static and quasi static load, in masonry		all bricks	
Use category	dry or wet masonry	all bricks	
Installation	Pre-positioned anchorage	Anchor rod or internal threaded anchor (in solid brick masonry and autoclaved aerated concrete)	Perforated sleeve with anchor rod or internal threaded anchor (in perforated and solid brick masonry) Size: FIS H 12x50 K FIS H 12x85 K FIS H 16x85 K FIS H 16x130 K FIS H 20x85 K FIS H 20x130 K FIS H 20x200 K
	Push through anchorage	Anchor rod; use only in cylindrical drill hole (in solid brick masonry and autoclaved aerated concrete)	Perforated sleeve with anchor rod (in perforated and solid brick masonry) Size: FIS H 18x130/200 K FIS H 22x130/200 K
Installation conditions	category d/d	all bricks	
	category w/d		
	category w/w		
Installation direction		D3 (downward and horizontal and upwards (e.g. overhead) installation)	
Installation temperature		$T_{i,min}$ = 0 °C bis $T_{i,max}$ = +40 °C	
In-service temperature	Temperature range Tb	-40 °C to +80 °C	(max. short term temperature +80 °C max. long term temperature +50 °C)
	Temperature range Tc	-40 °C to +120 °C	(max. short term temperature +120 °C; max. long term temperature +72 °C)

fischer injection system FIS V Plus for masonry

Intended Use
Specifications (part 1)

Annex B 1

Electronic copy of the ETA by DIBt: ETA-20/0729

Specifications of intended use (part 2)

Anchorages subject to:

- Static and quasi-static loads

Base materials:

- Solid brick masonry (Use category b) and autoclaved aerated concrete (Use category d), acc. to Annex B 13 / B 14
- Hollow brick masonry (use category c), according to Annex B 13 / B 14
- For minimum thickness of masonry member is h_{ef}+30mm
- Mortar strength class of the masonry M2,5 at minimum according to EN 998-2:2010
- For other bricks in solid masonry, hollow or perforated masonry and autoclaved aerated concrete, the characteristic resistance of the anchor may be determined by job site tests according to EOTA Technical Report TR 053, Annex B under consideration of the β-factor according to Annex C 110, Table C110.1

  Note (only applies to solid bricks and autoclaved aerated concrete):
  The characteristic resistance is also valid for larger brick sizes, higher compressive strength and higher raw density of the masonry unit.

Temperature Range:

- **Tb:** From - 40°C to +80°C (max. short term temperature +80°C and max. long term temperature +50°C)
- **Tc:** From -40°C to +120°C (max. short term temperature +120°C and max. long term temperature +72°C)

Use conditions (Environmental conditions):

- **X1:** Structures subject to dry internal conditions exist (zinc coated steel, stainless steel or high corrosion resistant steel)
- **X2:** Structures subject to external atmospheric exposure including industrial and marine environment or exposure to permanently damp internal condition, if no particulary aggressive conditions exist (stainless steel or high corrosion resistant steel)
- **X3:** Structures subject to external atmospheric exposure and to permanently damp internal condition, if other particulary aggressive conditions exist (high corrosion resistant steel)

  Note: Particulary aggressive conditions are e.g. permanent, alternating immersion in seawater or the splash zone of seawater, chloride atmosphere of indoor swimming pools or atmosphere with extreme chemical pollution (e.g. in desulphurization plants or road tunnels where de-icing materials are used)

Electronic copy of the ETA by DIBt: ETA-20/0729

Specifications of intended use (part 2 continued)

Design:

- The anchorages have to be designed in accordance with EOTA Technical Report TR 054, Design method A under the responsibility of an engineer experienced in anchorages and masonry work.
  Applies to all bricks, if no other values are specified:
  $N_{Rk} = N_{Rk,b} = N_{Rk,p}$
  $V_{Rk} = V_{Rk,b} = V_{Rk,c}$
  For the Calculation of pulling out a brick under tension load $\mathbf{N_{Rk,pb}}$ or
  pushing out a brick under shear load $\mathbf{V_{Rk,pb}}$ see EOTA Technical Report TR 054.
  $\mathbf{N_{Rk,s}}$, $\mathbf{V_{Rk,s}}$ and $\mathbf{M^0_{Rk,s}}$ see annex C1-C3
  Factors for job site tests and displacements see Annex C110
- Verifiable calculation notes and drawings have to be prepared taking account the relevant masonry in the region of the anchorage, the loads to be transmitted and their transmission to the supports of the structure. The position of the anchor is indicated on the design drawings.

Installation:

- Category d/d: - Installation and use in dry structures
- Category w/w: - Installation and use in dry and wet structures
- Category w/d: - Installation in wet structures and use in dry structures
- Hole drilling see Annex C (drilling method)
- In case of aborted hole: The hole shall be filled with mortar
- Bridging of unbearing layer (e.g. plaster) at perforated brick masonry see Annex B 6, Table B6.1
- Anchor installation carried out by appropriately qualified personnel and under the supervision of the person responsible for technical matters of the site
- Fastening screws or anchor rods (including nut and washer) must comply with the appropriate material and property class of the fischer internal threaded anchor FIS E.
- minimum curing time see Annex B 8, Table B8.2
- Commercial standard threaded rods, washers and hexagon nuts may also be used if the following requirements are fulfilled:
  Material dimensions and mechanical properties of the metal parts according to the specifications are given in Annex A 5, Table 5.1
  Conformation of material and mechanical properties of the metal parts by inspection certificate 3.1 according to EN 10204:2004, the documents shall be stored
  Marking of the anchor rod with the envisage embedment depth. This may be done by the manufacturer of the rod or by a person on job site

Electronic copy of the ETA by DIBt: ETA-20/0729

Table B4.1: Installation parameters for anchor rods in solid bricks and autoclaved aerated concrete without perforated sleeves

Anchor rod	Thread	M6	M8	M10	M12	M16
Nominal drill hole diameter	d_0 [mm]	8	10	12	14	18
Effective anchorage depth h_{ef} [1)] in AAC cylindrical drill hole	$h_{0,min}=h_{ef,min}$ [mm]	100				
	$h_{0,max}=h_{ef,max}$ [mm]	200				
Effective anchorage depth h_{ef} [1)] in AAC conical drill hole	h_0 [mm]	-	h_{ef} + 5			-
	$h_{ef,1}$ [mm]		75			
	$h_{ef,2}$ [mm]		95			
Effective anchorage depth h_{ef} [1)] in solid brick (depth of drill hole $h_0 = h_{ef}$)	$h_{ef,min}$ [mm]	50				
	$h_{ef,max}$ [mm]	h-30, ≤200				
Diameter of clearance hole in the fixture	pre-position $d_f \leq$ [mm]	7	9	12	14	18
	push through $d_f \leq$ [mm]	9	11	14	16	20
Diameter of cleaning brush	$d_b \geq$ [mm]	see Table B8.1				
Maximum installation torque	T_{inst} [Nm]	see parameters of brick				

[1)] $h_{ef,min} \leq h_{ef} \leq h_{ef,max}$ is possible.

fischer anchor rods M6, M8, M10, M12, M16

Marking (on random place) fischer anchor rod:

Steel zinc plated PC[1)] 8.8	• or +	Steel hot-dip galvanised PC[1)] 8.8	•
High corrosion resistant steel HCR PC[1)] 50	•	High corrosion resistant steel HCR PC[1)] 70	–
High corrosion resistant steel HCR PC[1)] 80	(	Stainless steel R property class 50	~
Stainless steel R property class 80	✳		

Alternatively: Colour coding according to DIN 976-1: 2016; property class 4.6 marking according to EN ISO 898-1:2013

[1)] PC = property class

Installation conditions:

Anchor rod in cylindrical drill hole

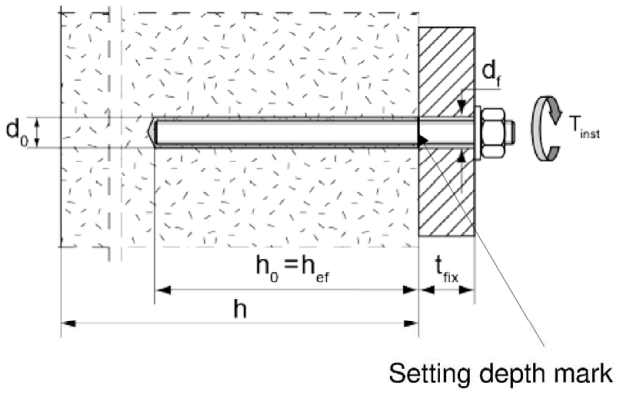

Anchor rod in conical drill hole

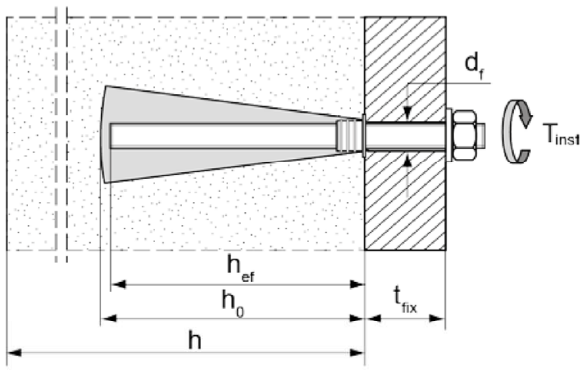

Pictures not to scale

fischer injection system FIS V Plus for masonry

Intended Use
Installation parameters for anchor rods without perforated sleeve

Annex B 4

Electronic copy of the ETA by DIBt: ETA-20/0729

Table B5.1: Installation parameters for internal threaded anchors FIS E in solid bricks and autoclaved aerated concrete without perforated sleeves

Internal threaded anchor FIS E		**11x85 M6**	**11x85 M8**	**15x85 M10**	**15x85 M12**
Diameter of anchor	d_H [mm]	11		15	
Nominal drill hole diameter	d_0 [mm]	14		18	
Length of anchor	L_H [mm]	85			
Effective anchorage depth	$h_0 = h_{ef}$ [mm]	85			
Effective anchorage depth h_{ef} in AAC (conical drill hole)	h_0 [mm]	100		-	
	h_{ef} [mm]	85			
Diameter of cleaning brush	$d_b \geq$ [mm]	see Table B8.1			
Maximum installation torque	T_{inst} [Nm]	see parameters of brick			
Diameter of clearance hole in the fixture	d_f [mm]	7	9	12	14
Screw-in depth	$l_{E,min}$ [mm]	6	8	10	12
	$l_{E,max}$ [mm]	60			

fischer Internal threaded anchor FIS E

FIS E 11x85 M6, FIS E 11x85 M8

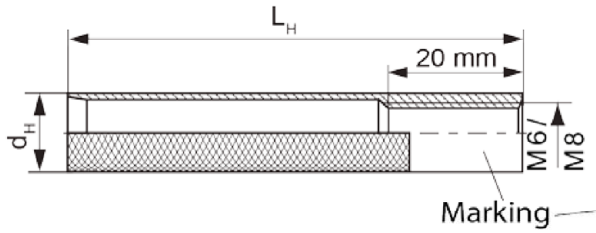

FIS E 15x85 M10, FIS E 15x85 M12

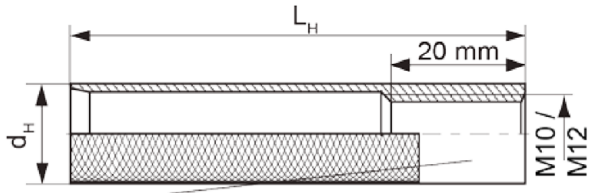

Marking:

Size, e.g. **M8**, Stainless steel: R, e.g. **M8 R**, High corrosion-resistant steel: HCR, e.g. **M8 HCR**

Installation conditions:

Internal threaded anchor in cylindrical drill hole

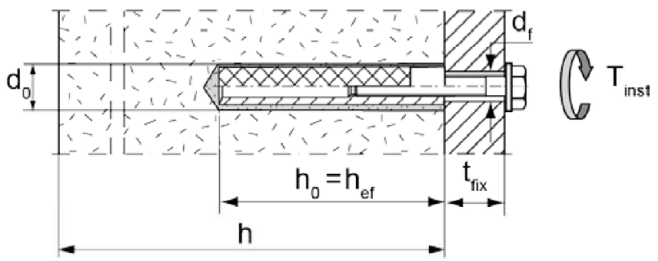

Internal threaded anchor in conical drill hole

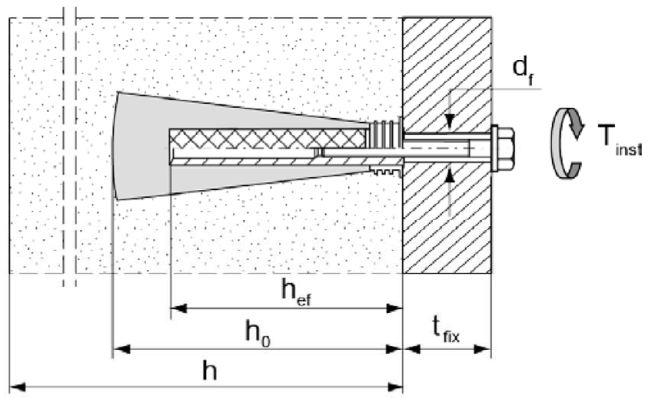

Pictures not to scale

fischer injection system FIS V Plus for masonry

Intended Use
Installation parameters for internal threaded rods FIS E without perforated sleeve

Annex B 5

Electronic copy of the ETA by DIBt: ETA-20/0729

Table B6.1: Installation parameters for anchor rods and internal threaded anchors FIS E with perforated sleeves (pre-positioned anchorage)

perforated sleeve FIS H K		**12x50**	**12x85**[2]	**16x85**	**16x130**[2]	**20x85**	**20x130**[2]	**20x200**[2]
Nominal drill hole diameter $d_0 = D_{sleeve,nom}$	d_0 [mm]	12		16		20		
Depth of drill hole	h_0 [mm]	55	90	90	135	90	135	205
Effective anchorage depth	$h_{ef,min}$ [mm]	50	65	85	110	85	110	180
	$h_{ef,max}$ [mm]	50	85	85	130	85	130	200
Size of threaded rod	[-]	M6 und M8		M8 und M10		M12 und M16		
Size of internal threaded anchor FIS E		-	-	11x85	-	15x85	-	-
Diameter of cleaning brush[1]	$d_b \geq$ [mm]	see Table B8.1						
Maximum installation torque	T_{inst} [Nm]	see parameters of brick						

[1] Only for solid areas in hollow bricks and solid bricks.

[2] Bridging of unbearing layer (e.g. plaster) is possible. When reducing the effective anchorage depth $h_{ef,min}$, the values of the next shorter perforated sleeve of the same diameter must be used. The smaller value of charastereristic resistance must be taken.

Perforated sleeve

FIS H 12x50 K; FIS H 12x85 K; FIS H 16x85 K; FIS H 16x130 K;
FIS H 20x85 K; FIS H 20x130 K; FIS H 20x200 K

Marking:
Size $D_{sleeve,nom}$ x L_{sleeve}
(e.g.: 16x85)

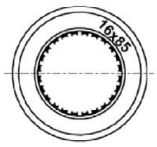

$D_{sleeve,nom}$

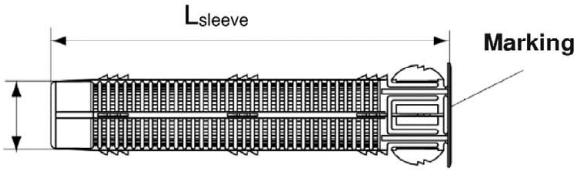

fischer Internal threaded anchor FIS E

FIS E 11x85 M6, FIS E 11x85 M8

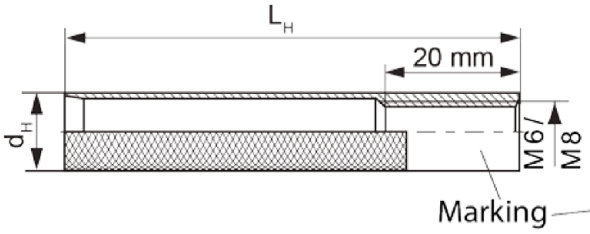

FIS E 15x85 M10, FIS E 15x85 M12

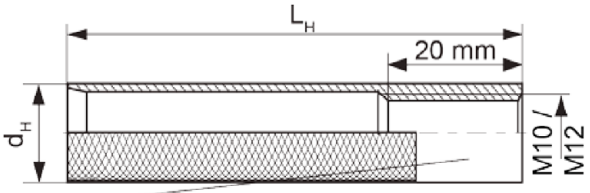

Installation conditions:

Anchor rod with perforated sleeve

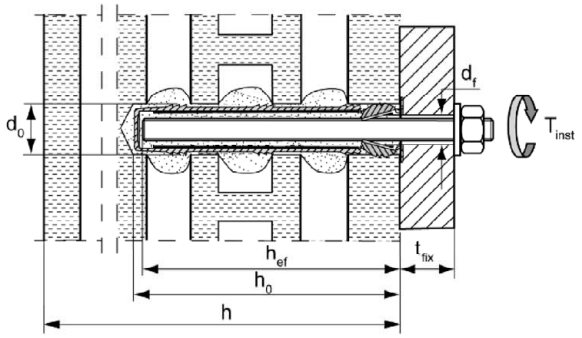

Internal threaded anchor with perforated sleeve

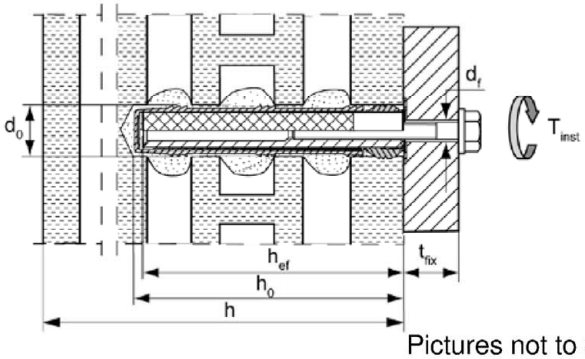

Pictures not to scale

fischer injection system FIS V Plus for masonry

Intended Use
Installation parameters for anchor rods and internal threaded anchors FIS E with perforated sleeve (pre-positioned anchorage)

Annex B 6

Electronic copy of the ETA by DIBt: ETA-20/0729

Table B7.1: Installation parameters for anchor rods with perforated sleeves (push through anchorage)

Perforated sleeve FIS H K		**18x130/200**		**22x130/200**
Nominal sleeve diameter	$D_{sleeve,nom}$ [mm]	16		20
Nominal drill hole diameter	d_0 [mm]	18		22
Depth of drill hole	h_0 [mm]	135		
Effective anchorage depth	h_{ef} [mm]	≥130		
Diameter of cleaning brush [1)]	d_b ≥ [mm]	Siehe Tabelle B8.1		
Size of threaded rod	[-]	M10	M12	M16
Maximum installation torque	T_{inst} [Nm]	see parameters of brick		
Thickness of fixture	$t_{fix,max}$ [mm]	200		

[1)] Only for solid areas in hollow bricks and solid bricks.

Perforated sleeve
FIS H 18x130/200 K; FIS H 22x130/200 K

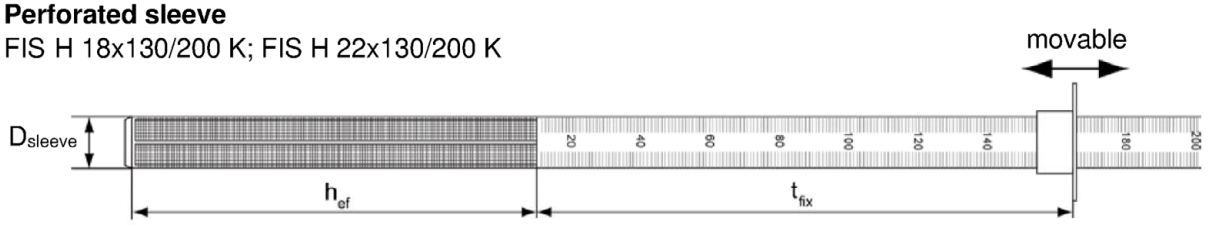

Installation conditions:

Anchor rod with perforated sleeve

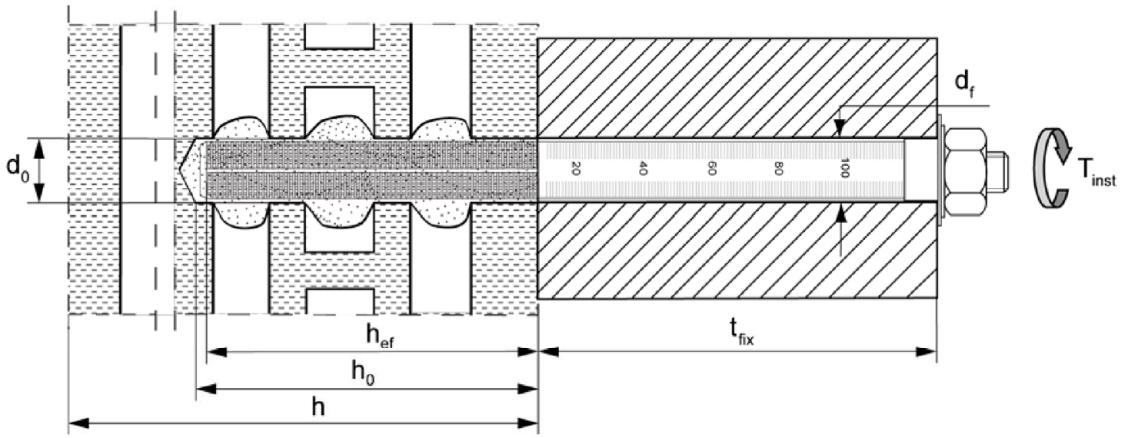

Pictures not to scale

fischer injection system FIS V Plus for masonry

Intended Use
Installation parameters for anchor rods with perforated sleeves (push through anchorage)

Annex B 7

Electronic copy of the ETA by DIBt: ETA-20/0729

Tabelle B8.1: Parameters of the cleaning brush BS (steel brush with steel bristles)

The size of the cleaning brush refers to the drill hole diameter

Drill hole diameter	d_0 [mm]	8	10	12	14	16	18	20	22
Brush diameter	d_b [mm]	9	11	14	16	20	20	25	25

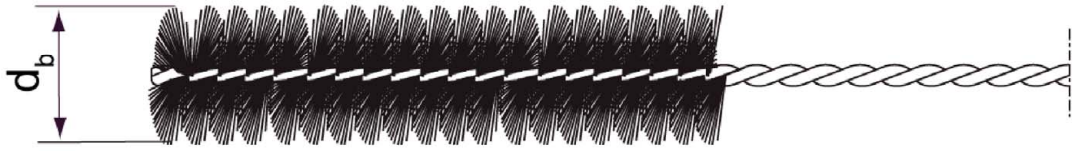

Only for solid bricks and autoclaved aerated concrete

Table B8.2: Maximum processing times and minimum curing times
(During the curing time of the mortar the masonry temperature may not fall below the listed minimum temperature)

Temperature at anchoring base [°C]	Maximum processing time t_{work}			Minimum curing time [1] t_{cure}		
	FIS VW Plus High Speed [3]	FIS V Plus [2]	FIS VS Plus Low Speed [2]	FIS VW Plus High Speed [3]	FIS V Plus [2]	FIS VS Plus Low Speed [2]
> 0 to 5	5 min	13 min	20 min	3 h	3 h	6 h
> 5 to 10	3 min	9 min	20 min	50 min	90 min	3 h
> 10 to 20	1 min	5 min	10 min	30 min	60 min	2 h
> 20 to 30	-	4 min	6 min	-	45 min	60 min
> 30 to 40	-	2 min	4 min	-	35 min	30 min

[1] For wet bricks the curing time must be doubled

[2] Minimum cartridge temperature +5°C

[3] Minimum cartridge temperature ±0°C

Pictures not to scale

fischer injection system FIS V Plus for masonry

Intended use
Cleaning brush (steel brush)
Maximum processing times and minimum curing times

Annex B 8

Electronic copy of the ETA by DIBt: ETA-20/0729

Installation instruction part 1

Installation in solid brick and autoclaved aerated concrete (without perforated sleeve)

1	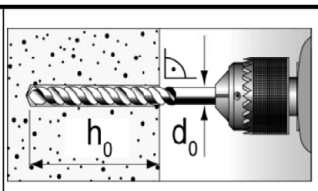	Drill the hole (drilling method see Annex C of the respective brick) depth of drill hole $\mathbf{h_0}$ and drill hole diameter $\mathbf{d_0}$ see **Table B4.1; B5.1**		
2	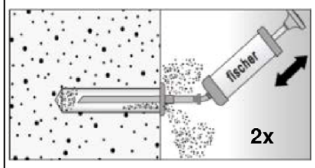	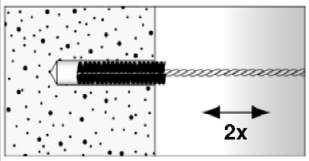	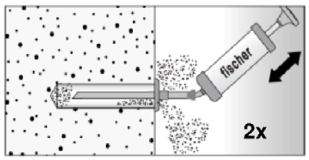	Blow out the drill hole twice. Brush twice and blow out twice again.
3	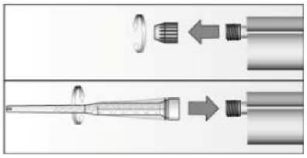	Remove the sealing cap. Screw on the static mixer. (the spiral in the static mixer must be clearly visible)		
4		Place the cartridge into a suitable dispenser	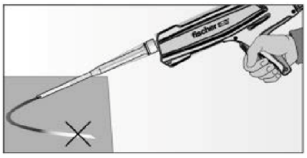	Press out approximately 10 cm of mortar until the resin is permanently grey in colour. Mortar which is not grey in colour will not cure and must be disposed of.
5	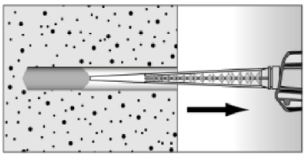	Fill approximetly 2/3 of the drill hole with mortar beginning from the bottom of the hole[1]. Avoid bubbles!	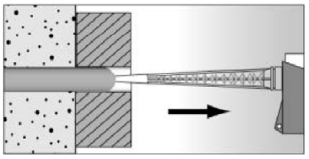	For push through anchorage fill the annular clearance with mortar.
6	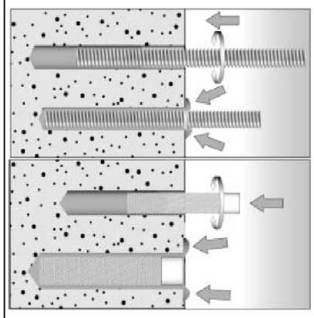	Only use clean and oil-free metal parts. Mark the anchor rod for setting depth. Insert the anchor rod or internal threaded anchor FIS E by hand using light turning motions. When reaching the setting depth marking, excess mortar must emerge from the mouth of the drill hole.		
7		Do not touch. Minimum curing time see Table **B8.2**	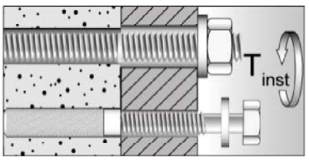	Mounting the fixture. T_{inst} see parameter of brick.

[1] Exact volume of mortar see manufacturer´s specification.

fischer injection system FIS V Plus for masonry	**Annex B 9**
Intended use Installation instruction (without perforated sleeve) part 1	

Electronic copy of the ETA by DIBt: ETA-20/0729

Installation instruction part 2

Installation in perforated or solid brick with perforated sleeve (pre-positioned anchorage)

1	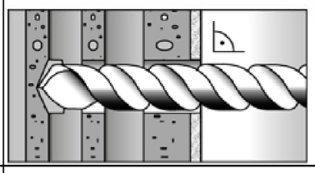	Drill the hole (drilling method see Annex C of the respective brick). depth of drill hole $\mathbf{h_0}$ and drill hole diameter $\mathbf{d_0}$ see **Table B6.1**	When install perforated sleeves in solid bricks or solid areas of hollow bricks, also clean the hole by blowing out and brushing.	
2	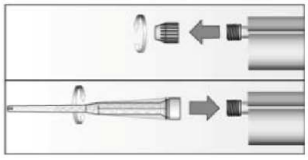	Remove the sealing cap. Screw on the static mixer. (the spiral in the static mixer must be clearly visible)		
3		Place the cartridge into a suitable dispenser.	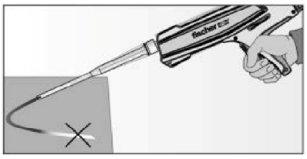	Press out approximately 10 cm of mortar until the resin is permanently grey in colour. Mortar which is not grey in colour will not cure and must be disposed of.
4	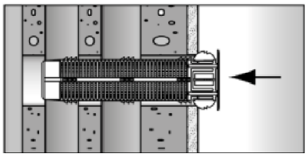	Insert the perforated sleeve flush with the surface of the masonry or plaster.	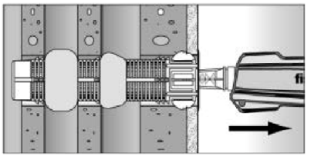	Fill the perforated sleeve completely with mortar beginning from the bottom of the hole[1].
5	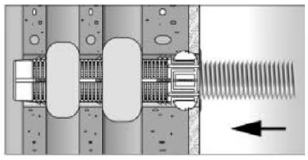	Only use clean and oil-free metal parts. Mark the ancher rod for setting depth. Insert the anchor rod or the internal threaded anchor FIS E by hand using light turning motions until reaching the setting depth marking (anchor rod) or flush with the surface (internal threaded anchor).		
6		Do not touch. Minimum curing time see Table **B8.2**	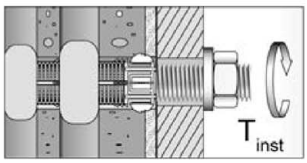	Mounting the fixture. T_{inst} see parameter of brick.

[1] Exact volume of mortar see manufacturer´s specification.

fischer injection system FIS V Plus for masonry	**Annex B 10**
Intended use Installation instruction (with perforated sleeve) part 2	

Electronic copy of the ETA by DIBt: ETA-20/0729

Installation instruction part 3

Installation in perforated or solid brick with perforated sleeve (push through anchorage)

1	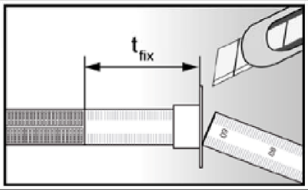	Push the movable stop up to the correct thickness of fixture and cut the overlap.	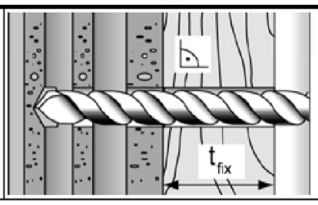	Drill the hole through the fixture. Depth of drill hole **(h_0 + t_{fix})** and drill hole diameter see **Table B7.1**
2	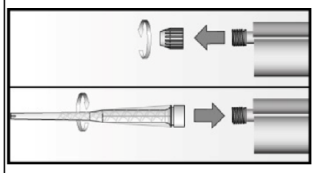	Remove the sealing cap. Screw on the static mixer. (the spiral in the static mixer must be clearly visible)		
3	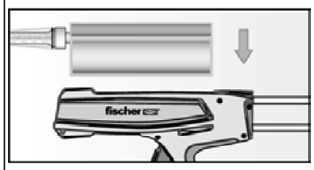	Place the cartridge into a suitable dispenser.	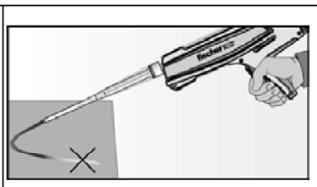	Press out approximately 10 cm of mortar until the resin is permanently grey in colour. Mortar which is not grey in colour will not cure and must be disposed of.
4	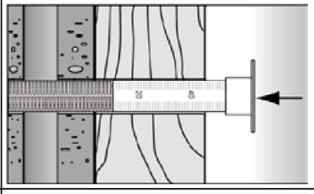	Insert the perforated sleeve flush with the surface of the fixture into the drill hole.	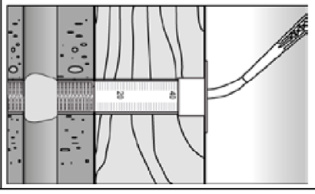	Fill the sleeve with mortar beginning from the bottom of the hole.[1] For deep drill holes use an extension tube.
5	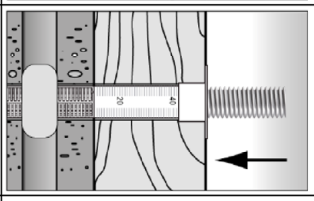	Only use clean and oil-free metal parts. Mark the anchor rod for setting depth. Insert the anchor rod or the internal threaded anchor FIS E by hand using light turning motions until reaching the setting depth marking (anchor rod) or flush with the surface (internal threaded anchor).		
6		Do not touch. Minimum curing time see Table **B8.2**	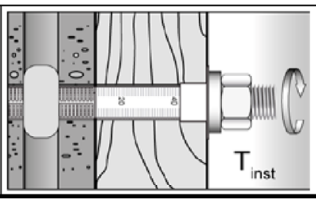	Mounting the fixture. T_{inst} see parameter of brick.

[1] Exact volume of mortar see manufacturer´s specification.

fischer injection system FIS V Plus for masonry

Intended use
Installation instruction (with perforated sleeve) part 3

Annex B 11

Electronic copy of the ETA by DIBt: ETA-20/0729

Installation instruction part 4

Installation in autoclaved aerated concrete with special conic drill bit PBB (pre-positioned anchorage)

1	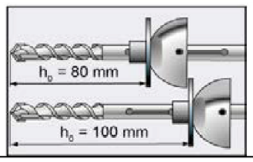	Position the movable drill bit arrester on the used drill hole depth (see Annex B 4, Table B4.1) For this, unlock the clamp screw and slide the arrester. Now fix the clamp screw.		
2	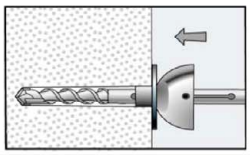	Drill the cylindrical hole with rotating drill until the arrester contact the material surface. (drilling method see Annex C of the respective brick)		
3	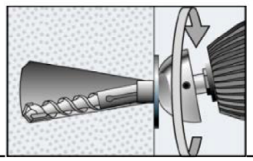	Deviate the working power drill circulate to generate an conic undercut in the material.		
4	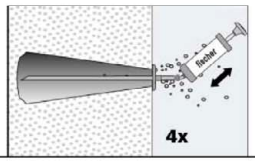	Blow out the drill hole four times.		
5	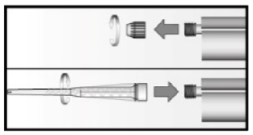	Remove the sealing cap. Screw on the static mixer. (the spiral in the static mixer must be clearly visible)		
6	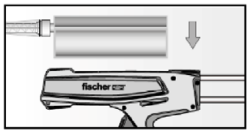	Place the cartridge into a suitable dispenser.	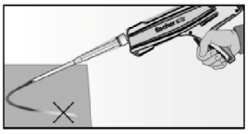	Press out approximately 10 cm of mortar until the resin is permanently grey in colour. Mortar which is not grey in colour will not cure and must be disposed of.
7	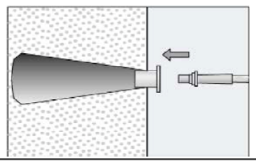	Put the center sleeve into the drill hole and adapt the injection adapter onto the static mixer.	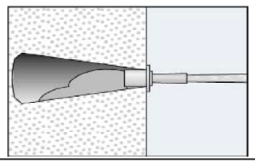	Fill the drill hole with injection mortar.
8	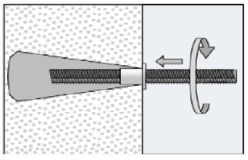	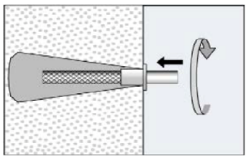	Only use clean and oil-free metal parts. Mark the anchor rod for setting depth. Insert the anchor rod or internal threaded anchor FIS E by hand using light turning motions. When reaching the setting depth marking, excess mortar must emerge from the mouth of the drill hole.	
9		Do not touch. Minimum curing time see **Table B8.2**	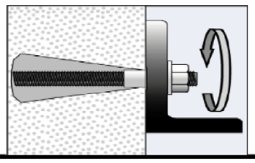	Mounting the fixture. T_{inst} see parameter of brick.

fischer injection system FIS V Plus for masonry	**Annex B 12**
Intended use Installation instruction for autoclaved aerated concrete with special conic drill bit PBB (pre-positioned anchorage) part 4	

Electronic copy of the ETA by DIBt: ETA-20/0729

Table B13.1: Overview of controlled bricks (part 1)

Kind of masonry	Brick format [mm]	Compressive strength f_b [N/mm²]	Producing counrty	Density ρ [kg/dm³]	Annex
Solid brick Mz					
Solid brick Mz	**NF** ≥240x115x71	12 - 20	Germany	≥1,8	C4 - C7
	2DF ≥240x115x113	10 - 16	Germany	≥1,8	C8/C9
	≥ 245x118x54	10 - 20	Italy	≥1,8	C10/C11
	≥ 230x108x55	10 - 20	Denmark	≥1,8	C12/C13
Solid sand- lime brick KS / perforated Sand- lime brick KSL					
Solid sand - lime brick KS	**NF** ≥240x115x71	12 - 28	Germany	≥2,0	C14/C15
	8DF ≥ 250x240x240	10 - 28	Germany	≥2,0	C16/C17
	≥ 997x214x538	10 - 36	Netherlands	≥1,8	C18/C19
Perforated sand - lime brick KSL	**3DF** 240x175x113	8 - 20	Germany	≥1,4	C20 - C23
Vertical perforated brick HLz					
Vertical perforated brick HLz	370x240x237	4 - 12	Germany	≥1,0	C24/C25
	500x175x237	4 - 12	Germany	≥1,0	C24/C25
	2DF 240x115x113	6 - 28	Germany	≥1,4	C26/C27
	248x365x248	4 - 8	Germany	≥0,6	C28 - C31
	248x365x249	8 - 12	Germany	≥0,7	C32 - C35
	248x365x249	4 - 6	Germany	≥0,5	C36 - C39
	248x425x248	4 - 8	Germany	≥0,8	C40 - C43
	248x425x248	4 - 8	Germany	≥0,6	C44 - C47
	500x200x315	4 - 8	France	≥0,6	C48 - C51
	500x200x300	4 - 10	France	≥0,7	C52 - C55
	500x200x315	2 - 8	France	≥0,7	C56 - C59
	560x200x275	4 - 8	France	≥0,7	C60/C61
	255x120x118	2 - 12	Italy	≥1,0	C62 - C64
	275x130x94	6 - 20	Spain	≥0,8	C65/C66
	220x190x290	6 - 10	Portugal	≥0,7	C67 - C70
	253x300x240	2 - 6	Austria	≥0,8	C71 - C74
	250x440x250	6 - 10	Austria	≥0,7	C75 - C78
	230x108x55	2 - 8	Denmark	≥1,4	C79/C80
Horizontal perforated brick LLz					
Horizontal perforated brick LLz	248x78x250	2 - 6	Italy	≥0,7	C81/C82
	128x88x275	2	Spain	≥0,8	C83/C84
Light-weight concrete hollow block Hbl					
Light-weight concrete hollow block Hbl	362x240x240	2 - 4	Germany	≥1,0	C85 - C88
	500x200x200	2 - 6	France	≥1,0	C89/C90
	440x215x215	4 - 10	Ireland	≥1,2	C91 - C94

fischer injection system FIS V Plus for masonry

Intended use
Overview of controlled bricks (part 1)

Annex B 13

Electronic copy of the ETA by DIBt: ETA-20/0729

Table B14.1: Overview of controlled bricks (part 2)

Kind of masonry	Brick format [mm]	Compressive strength f_b [N/mm²]	Producing counrty	Density ρ [kg/dm³]	Annex
Light-weight concrete solid block Vbl					
Light-weight concrete solid block Vbl	≥ 372x300x254	2	Germany	≥0,6	C95/C96
	≥ 250x240x239	4 - 8	Germany	≥1,6	C97 - C100
	≥ 440x100x215	4 - 10	Ireland	≥2,0	C101/C102
	≥ 440x95x215	6 - 12	England	≥2,0	C103/C104
Autoclaved aerated concrete (AAC)					
PP2 / AAC	-	2	Germany	0,35	C105 - C109
PP4 / AAC	-	4	Germany	0,5	C105 - C109
PP6 / AAC	-	6	Germany	0,65	C105 - C109

Electronic copy of the ETA by DIBt: ETA-20/0729

Table B15.1: Overview dimensions of perforated and hollow bricks (part 1)

Solid sand-lime brick KS, 8DF, EN 771-2:2015 according to Annex C 16

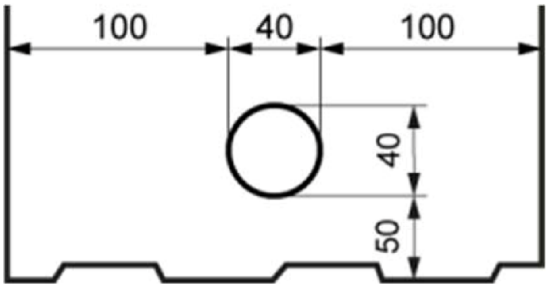

Perforated sand-lime brick KSL, 3DF, EN 771-2:2015; e.g. KS Wemding according to Annex C 20

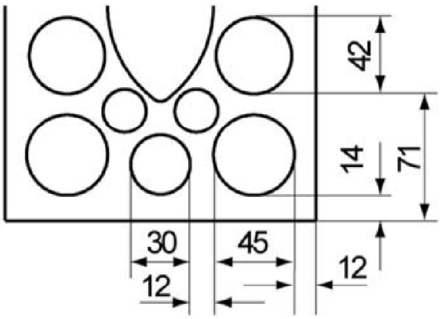

Vertical perforated brick HLz, EN 771-1:2015: e.g. Wienerberger, Poroton according to Annex C 24

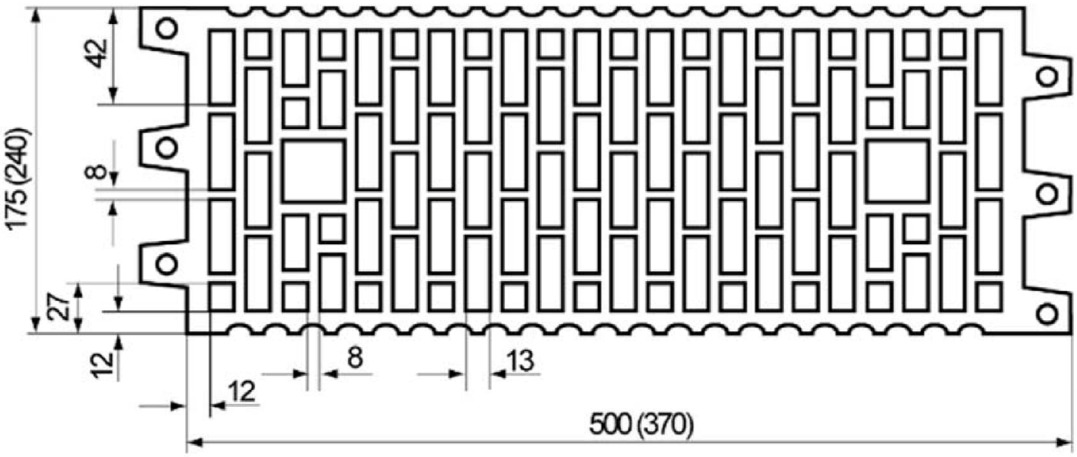

Vertical perforated brick HLz, 2DF, EN 771-1:2015; e.g. Wienerberger according to Annex C 26

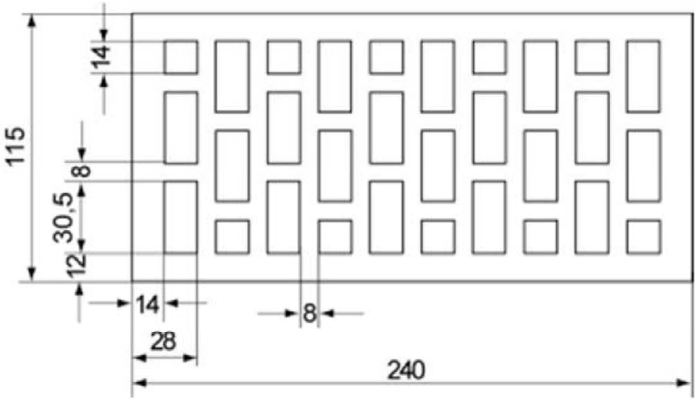

Vertical perforated brick HLz, T8, EN 771-1:2015; according to Annex C 28

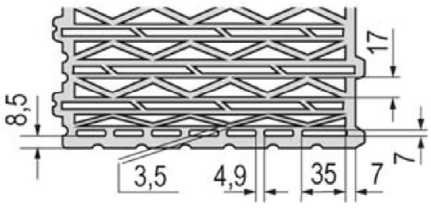

Pictures not to scale

fischer injection system FIS V Plus for masonry

Intended use
Overview dimensions of perforated and hollow bricks (part 1)

Annex B 15

Electronic copy of the ETA by DIBt: ETA-20/0729

Table B16.1: Overview dimensions of perforated and hollow bricks (part 2)

Vertical perforated brick HLz, T10, T11, EN 771-1:2015; according to Annex C32

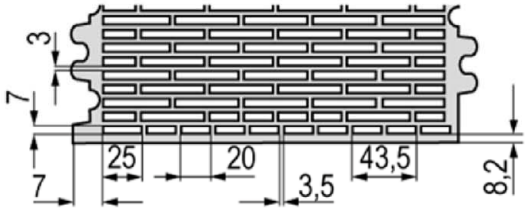

Vertical perforated brick HLz, T7 PF, filled with perlit, EN 771-1:2015; according to Annex C 36

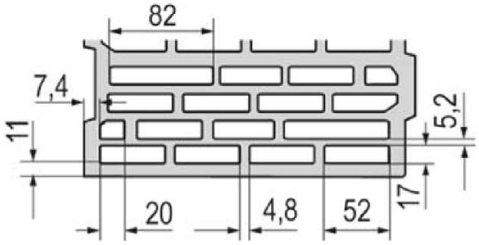

Vertical perforated brick HLz, S9 MW, filled with mineral wool, EN 771-1:2015; according to Annex C 40

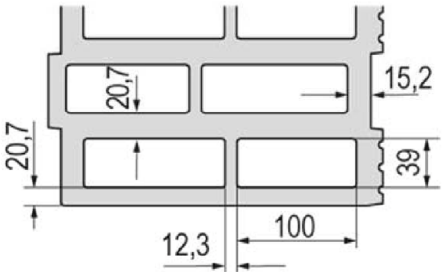

Vertical perforated brick HLz, T7 MW, filled with mineral wool, EN 771-1:2015; according to Annex C 44

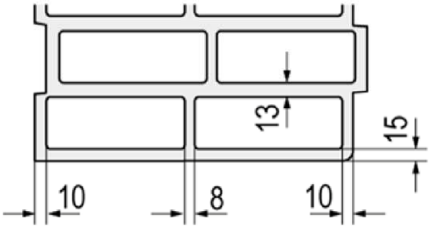

Vertical perforated brick HLz, EN 771-1:2015; e.g. Bouyer Leroux; According to Annex C 48

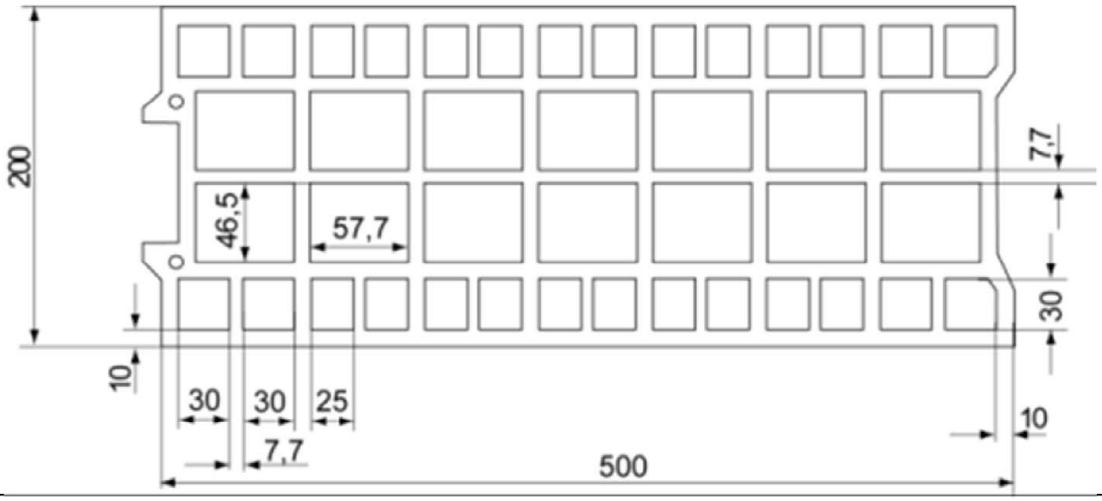

Pictures not to scale

fischer injection system FIS V Plus for masonry

Intended use
Overview dimensions of perforated and hollow bricks (part 2)

Annex B 16

Electronic copy of the ETA by DIBt: ETA-20/0729

Table B17.1: Overview dimensions of perforated and hollow bricks (part 3)

Vertical perforated brick HLz, EN 771-1:2015; e.g. Wienerberger according to Annex C 52

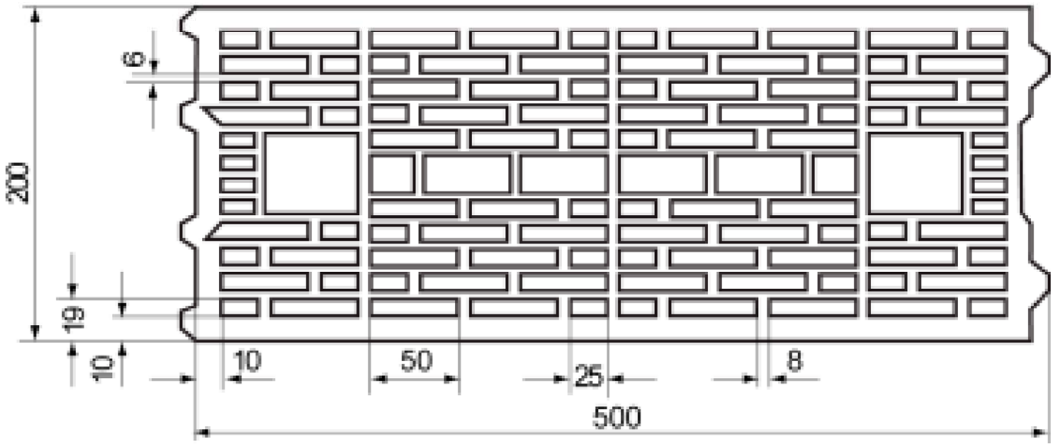

Vertical perforated brick HLz, EN 771-1:2015; e.g. Terreal according to Annex C 56

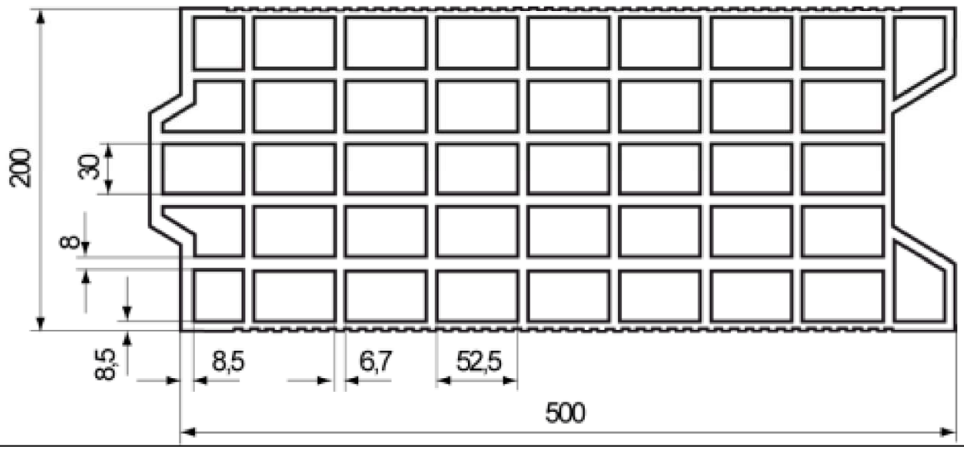

Vertical perforated brick HLz, EN 771-1:2015; e.g. Imery according to Annex C 60

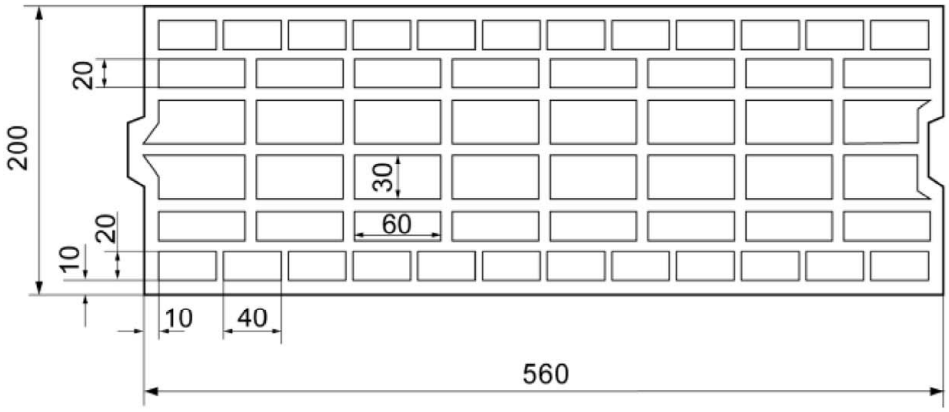

Pictures not to scale

fischer injection system FIS V Plus for masonry

Intended use
Overview dimensions of perforated and hollow bricks (part 3)

Annex B 17

Electronic copy of the ETA by DIBt: ETA-20/0729

Table B18.1: Overview dimensions of perforated and hollow bricks (part 4)

Vertical perforated brick HLz, EN 771-1:2015;
e.g. Wienerberger according to Annex C 62

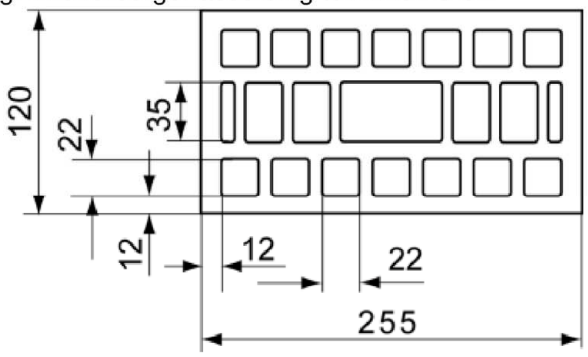

Vertical perforated brick HLz, EN 771-1:2015;
e.g. Cermanica Farreny S.A. according to Annex C 65

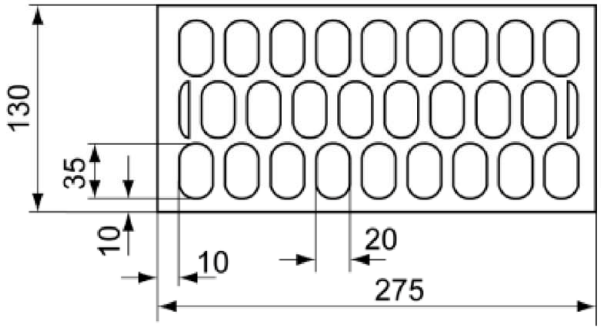

Vertical perforated brick HLz, EN 771-1:2015;
e.g. Perceram according to Annex C 67

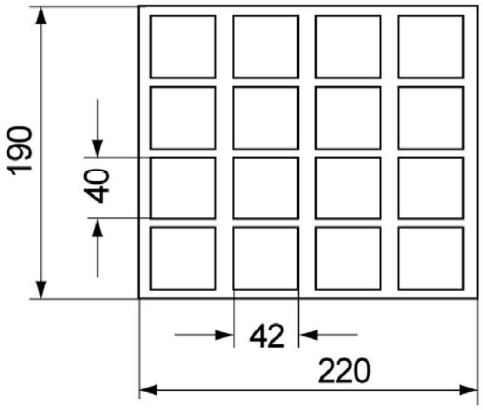

Vertical perforated brick HLz, EN 771-1:2015;
e.g. Ziegelwerk Brenna according to Annex C 71

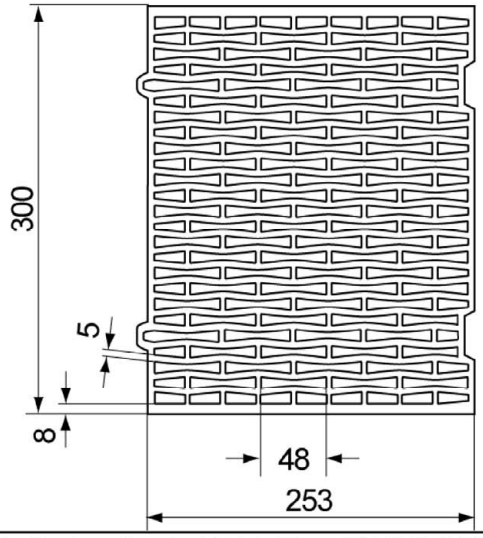

Vertical perforated brick HLz, Porotherm W 44, filled with mineral wool, EN 771-1:2015 according to Annex C 75

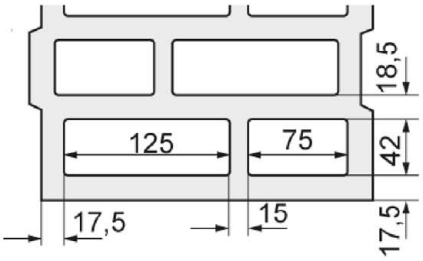

Vertical perforated brick HLz, EN 771-1:2015;
e.g. Wienerberger according to Annex C 79

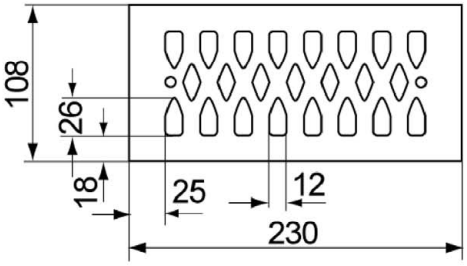

Pictures not to scale

fischer injection system FIS V Plus for masonry

Intended use
Overview dimensions of perforated and hollow bricks (part 4)

Annex B 18

Electronic copy of the ETA by DIBt: ETA-20/0729

Table B19.1: Overview dimensions of perforated and hollow bricks (part 5)

Horizontal perforated brick LLz, EN 771-1:2015; according to Annex C 81

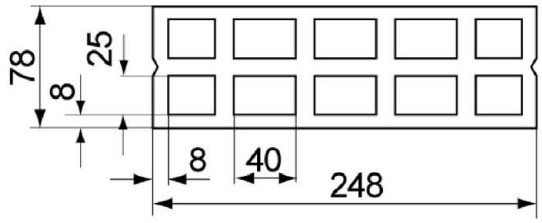

Horizontal perforated brick LLz, EN 771-1:2015; e.g. Cermanica Farreny S.A according to Annex C 83

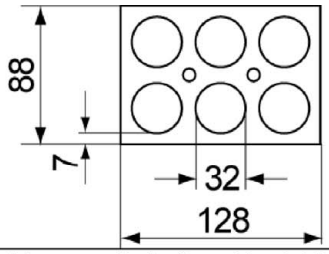

Light-weight concrete hollow block Hbl, EN 771-3:2015; according to Annex C 85

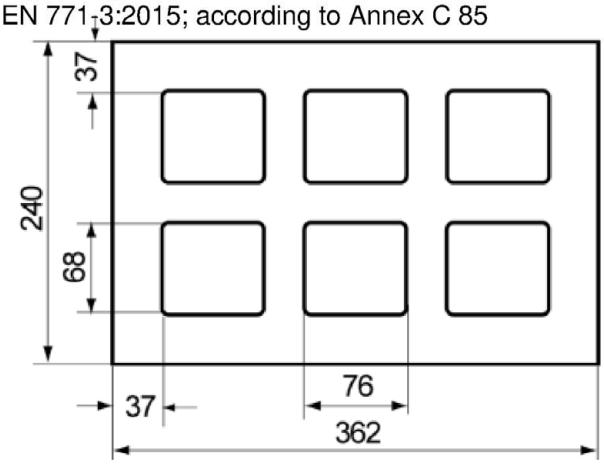

Light-weight concrete hollow block Hbl, EN 771-3:2015; e.g. Sepa according to Annex C 89

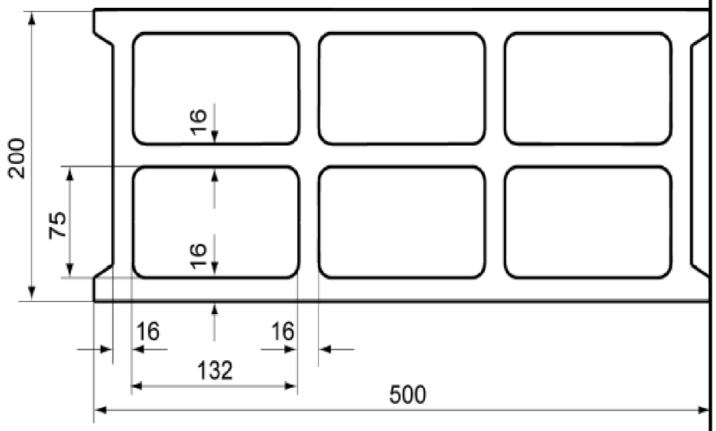

Light-weight concrete hollow block Hbl, EN 771-3:2015; e.g. Roadstone wood according to Annex C 91

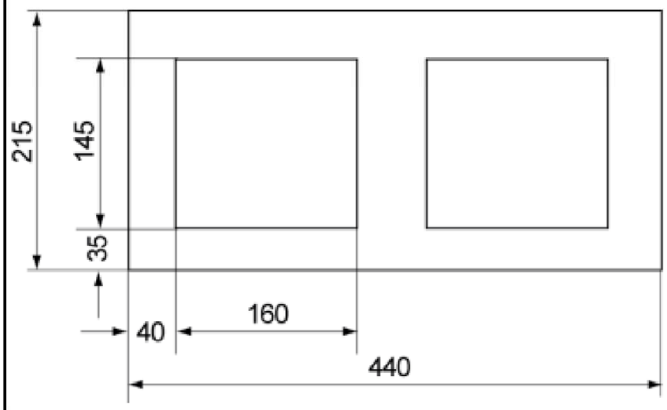

Light-weight concrete solid block Vbl, EN 771-3:2015; e.g. Sepa according to Annex C 97

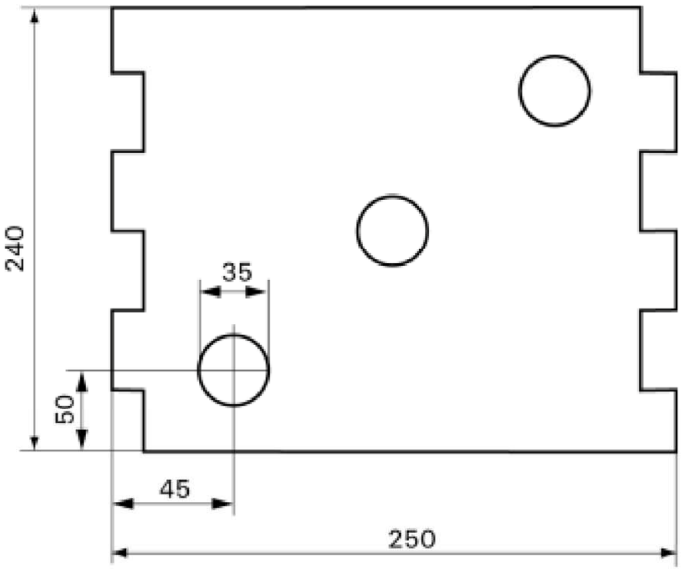

Pictures not to scale

fischer injection system FIS V Plus for masonry

Intended use
Overview dimensions of perforated and hollow bricks (part 5)

Annex B 19

Electronic copy of the ETA by DIBt: ETA-20/0729

Spacing and edge distance

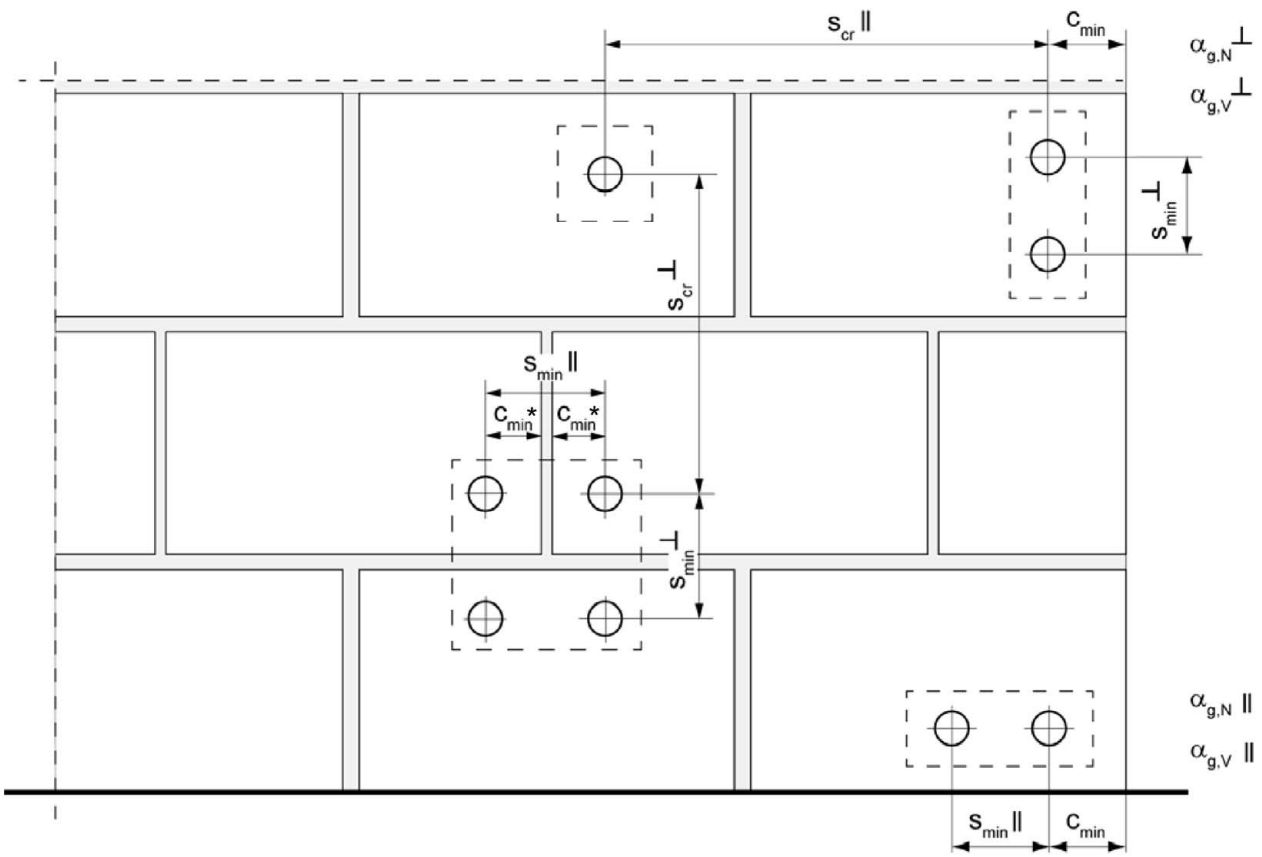

* Only, if vertical joints are not completely filled with mortar

s_{min} ‖	=	Minimum spacing parallel to bed joint
s_{min} ⊥	=	Minimum spacing vertical to bed joint
s_{cr} ‖	=	Characteristic spacing parallel to bed joint
s_{cr} ⊥	=	Characteristic spacing vertical to bed joint
$c_{cr} = c_{min}$	=	Edge distance
$\alpha_{g,N}$ ‖	=	Group factor for tension resistance, anchor group parallel to bed joint
$\alpha_{g,V}$ ‖	=	Group factor for shear resistance, anchor group parallel to bed joint
$\alpha_{g,N}$ ⊥	=	Group factor for tension resistance, anchor group vertical to bed joint
$\alpha_{g,V}$ ⊥	=	Group factor for shear resistance, anchor group vertical to bed joint

For $s \geq s_{cr}$ $\alpha_g = 2$

For $s_{min} \leq s < s_{cr}$ α_g according to installation parameters of brick

$N^g_{Rk} = \alpha_{g,N} \cdot N_{Rk}$; $V^g_{Rk} = \alpha_{g,V} \cdot V_{Rk}$ (Group of 2 anchors)

$N^g_{Rk} = \alpha_{g,N}$ ‖ $\cdot$ $\alpha_{g,N}$⊥ $\cdot N_{Rk}$; $V^g_{Rk} = \alpha_{g,V}$ ‖ $\cdot$ $\alpha_{g,V}$⊥ $\cdot V_{Rk}$ (Group of 4 anchors)

fischer injection system FIS V Plus for masonry	**Annex B 20**
Intended use Spacing and edge distance	

Electronic copy of the ETA by DIBt: ETA-20/0729

Table C1.1: Characteristic values for the **resistance to steel failure** of **anchor rods** under tension load

Anchor rod					**M6**	**M8**	**M10**	**M12**	**M16**
Resistance under tension load, steel failure									
Characteristic resistance $N_{Rk,s}$	Steel zinc plated	Property class	4.6	[kN]	8	15(13) [3]	23(21) [3]	33	63
			4.8		8	15(13) [3]	23(21) [3]	33	63
			5.8		10	19(17) [3]	29(27) [3]	43	79
			8.8		16	29(27) [3]	47(43) [3]	68	126
	Stainless steel R and High corrosion resistant steel HCR		50		10	19	29	43	79
			70		14	26	41	59	110
			80		16	30	47	68	126
Partial factors [1]									
Partial factor $\gamma_{Ms,N}$	Steel zinc plated	Property class	4.6	[-]	2,00				
			4.8		1,50				
			5.8		1,50				
			8.8		1,50				
	Stainless steel R and High corrosion resistant steel HCR		50		2,86				
			70		1,50[2] / 1,87				
			80		1,60				

[1] In absence of other national regulations

[2] Only for fischer FIS A made of high corrosion-resistant steel HCR

[3] Values in brackets are valid for undersized threaded rods with smaller stress area A_s for hot dip galvanised standard threaded rods according to EN ISO 10684:2004+AC:2009

Electronic copy of the ETA by DIBt: ETA-20/0729

Table C2.1: Characteristic values for the **resistance to steel failure** of **anchor rods** under shear load

Anchor rod					**M6**	**M8**	**M10**	**M12**	**M16**
Resistance under shear load, steel failure									
without lever arm									
Characteristic resistance $V_{Rk,s}$	Steel zinc plated	Property class	4.6	[kN]	4	9(8) [3]	14(13) [3]	20	38
			4.8		4	9(8) [3]	14(13) [3]	20	38
			5.8		6	11(10) [3]	17(16) [3]	25	47
			8.8		8	15(13) [3]	23(21) [3]	34	63
	Stainless steel R and High corrosion resistant steel HCR		50		5	9	15	21	39
			70		7	13	20	30	55
			80		8	15	23	34	63
with lever arm									
Characteristic resistance $M^0_{Rk,s}$	Steel zinc plated	Property class	4.6	[Nm]	6	15(13) [3]	30(27) [3]	52	133
			4.8		6	15(13) [3]	30(27) [3]	52	133
			5.8		7	19(16) [3]	37(33) [3]	65	166
			8.8		12	30(26) [3]	60(53) [3]	105	266
	Stainless steel R and High corrosion resistant steel HCR		50		7	19	37	65	166
			70		10	26	52	92	232
			80		12	30	60	105	266
Partial factors [1]									
Partial factor $\gamma_{Ms,V}$	Steel zinc plated	Property class	4.6	[-]	1,67				
			4.8		1,25				
			5.8		1,25				
			8.8		1,25				
	Stainless steel R and High corrosion resistant steel HCR		50		2,38				
			70		1,25 [2] / 1,56				
			80		1,33				

[1] In absence of other national regulations

[2] Only for fischer FIS A made of high corrosion-resistant steel HCR

[3] Values in brackets are valid for undersized threaded rods with smaller stress area A_s for hot dip galvanised standard threaded rods according to EN ISO 10684:2004+AC:2009.

Electronic copy of the ETA by DIBt: ETA-20/0729

Table C3.1: Characteristic values for the **resistance to steel failute** of **internal threaded anchors FIS E** under tension / shear load

fischer internal threaded anchor FIS E					**M6**	**M8**	**M10**	**M12**
Resistance under tension load, steel failure								
Characteristic resistance with screw	$N_{Rk,s}$	Property class	5.8	[kN]	10	18	29	42
		Property class 70	R		14	26	41	59
			HCR		14	26	41	59
Partial factors[1)]								
Partial factor	$\gamma_{Ms,N}$	Property class	5.8	[-]	1,50			
		Property class 70	R		1,87			
			HCR		1,87			
Resistance under shear load, steel failure								
without lever arm								
Characteristic resistance with screw	$V_{Rk,s}$	Property class	5.8	[kN]	5	9	15	21
		Property class 70	R		7	13	20	30
			HCR		7	13	20	30
with lever arm								
Characteristic resistance	$M^0_{Rk,s}$	Property class	5.8	[Nm]	8	19	37	65
		Property class 70	R		11	26	52	92
			HCR		11	26	52	92
Partial factors[1)]								
Partial factor	$\gamma_{Ms,V}$	Property class	5.8	[-]	1,25			
		Property class 70	R		1,56			
			HCR		1,56			

[1)] In absence of other national regulations

Electronic copy of the ETA by DIBt: ETA-20/0729

Solid brick Mz, NF, EN 771-1:2015

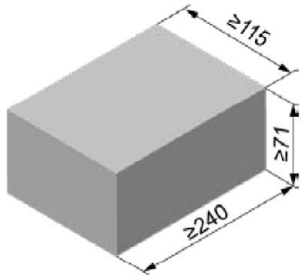

Solid brick Mz, NF, EN 771-1:2015			
Producer	e.g. Wienerberger		
Nominal dimensions [mm]	length L	width W	height H
	≥ 240	≥ 115	≥ 71
Density ρ [kg/dm³]	≥ 1,8		
Compressive strength f_b [N/mm²]	12 / 20		
Standard or annex	EN 771-1:2015		

Table C4.1: Installation parameters for edge distance c=100mm

Anchor rod			**M6**	**M8**	**M10**	**M12**	**-**		**-**	
Internal threaded anchor FIS E			**-**	**-**	**-**	**-**	**M6**	**M8**	**M10**	**M12**
							11x85		**15x85**	
Anchor rod and internal threaded anchor FIS E without perforated sleeve										
Effective anchorage depth	h_{ef}	[mm]	50	50	50	50	85			
			80	80	80	80				
			200	200	200	200				
Max. installation torque	T_{inst}	[Nm]	4	10			4	10		
General installation parameters										
Edge distance	c_{min}	[mm]	100				100			
Edge distance h_{ef}=200	c_{min}		150				-[1]			
Spacing	s_{min} II,N		60				60			
	h_{ef}=200 s_{min} II,N		240				-[1]			
	s_{min} II,V		240				240			
	s_{cr} II		240				240			
	s_{cr} ⊥ = s_{min} ⊥		75				75			
Drilling method										
Hammer drilling with hard metal hammer drill										

[1] No performance assessed

Table C4.2: Group factors

Anchor rods			**M6**	**M8**	**M10**	**M12**	**-**		**-**	
Internal threaded anchor FIS E			**-**	**-**	**-**	**-**	**M6**	**M8**	**M10**	**M12**
							11x85		**15x85**	
Edge distance	c_{min}	[mm]	**100**							
Group factor	$\alpha_{g,N}$ II	[-]	1,5							
	$\alpha_{g,V}$ II		2,0							
	h_{ef}=200 $\alpha_{g,N}$ II		1,5							
	h_{ef}=200 $\alpha_{g,V}$ II		2,0							
	$\alpha_{g,N}$ ⊥		2,0							
	$\alpha_{g,V}$ ⊥		2,0							
	h_{ef}=200 $\alpha_{g,N}$ ⊥		2,0							
	h_{ef}=200 $\alpha_{g,V}$ ⊥		2,0							

fischer injection system FIS V Plus for masonry

Performance
Solid brick Mz, NF, dimensions, installation parameters c=100mm

Annex C 4

Electronic copy of the ETA by DIBt: ETA-20/0729

Solid brick Mz, NF, EN 771-1:2015

Table C5.1: Characteristic resistance under tension load for edge distance c=100mm

Anchor rod		**M6**	**M8**	**M10**			**M12**			**-**		**-**	
Internal threaded anchor FIS E		**-**	**-**	**-**			**-**			**M6**	**M8**	**M10**	**M12**
										11x85		**15x85**	
$N_{Rk} = N_{Rk,p} = N_{Rk,b}$ [kN] depending on the compressive strength f_b (temperature range 50/80°C)													
compressive strength f_b	use categorie	Effective anchorage depth h_{ef} [mm]											
		≥50	≥50	50	80	200	50	80	200	85			
12N/mm²	w/w w/d	2,5	2,5	2	3	7,5	2	3,5	5	3,5			
	d/d	4	4	3,5	5	12	3	5,5	8	5,5			
20N/mm²	w/w w/d	3,5	3,5	3	4,5	11	3	5	7	5			
	d/d	5,5	5,5	5	7	12	4,5	8	11,5	8			

Factor for temperature range 72/120°C: 0,83

Table C5.2: Characteristic resistance under shear load for edge distance c=100mm

Anchor rod		**M6**	**M8**	**M10**		**M12**		**-**		**-**	
Internal threaded anchor FIS E		**-**	**-**	**-**		**-**		**M6**	**M8**	**M10**	**M12**
								11x85		**15x85**	
$V_{Rk} = V_{Rk,b} = V_{Rk,c}$ [kN] depending on the compressive strength f_b (temperature range 50/80°C and 72/120°C)											
compressive strength f_b	use categorie	Effective anchorage depth h_{ef} [mm]									
		≥50	≥50	≥50	200	≥50	200	85			
12N/mm²	w/w w/d d/d	2,5	2,5	4	8,5	4	11,5	2,5			
20N/mm²	w/w w/d d/d	4,0	4,0	6	12	5,5	12	4			

Factor for job site tests and displacements see annex C110

Electronic copy of the ETA by DIBt: ETA-20/0729

Solid brick Mz, NF, EN 771-1:2015

Table C6.1: Installation parameters for edge distance c=60mm

Anchor rod			**M6**	**M8**	**M10**	**M12**	**M16**	**-**		**-**	
Internal threaded anchor FIS E			**-**	**-**	**-**	**-**	**-**	**M6**	**M8**	**M10**	**M12**
								11x85		**15x85**	
Anchor rod and internal threaded anchor FIS E without perforated sleeve											
Effective anchorage depth	h_{ef}	[mm]	50	50	50	50	50	85			
			100	100	100	100	100				
			200	200	200	200	200				
Max. installation torque	T_{inst}	[Nm]	4	10				4	10		
General installation parameters											
Edge distance	c_{min}	[mm]	60								
Edge distance h_{ef}=200	c_{min}	[mm]	60								
Spacing	s_{min} II,N	[mm]	80								
	h_{ef}=200 s_{min} II,N	[mm]	80								
	s_{min} II,V	[mm]	80								
	s_{cr} II	[mm]	3x h_{ef}								
	s_{min} ⊥	[mm]	80								
	s_{cr} ⊥	[mm]	3x h_{ef}								
Drilling method											
Hammer drilling with hard metal hammer drill											

Table C6.2: Group factors

Anchor rods			**M6**	**M8**	**M10**	**M12**	**M16**	**-**		**-**	
Internal threaded anchor FIS E			**-**	**-**	**-**	**-**	**-**	**M6**	**M8**	**M10**	**M12**
								11x85		**15x85**	
Edge distance	c_{min}	[mm]	60								
Group factor	$\alpha_{g,N}$ II	[-]	0,6								
	$\alpha_{g,V}$ II	[-]	1,3								
	h_{ef}=200 $\alpha_{g,N}$ II	[-]	1,4								
	h_{ef}=200 $\alpha_{g,V}$ II	[-]	1,5								
	$\alpha_{g,N}$ ⊥	[-]	0,3								
	$\alpha_{g,V}$ ⊥	[-]	1,3								
	h_{ef}=200 $\alpha_{g,N}$ ⊥	[-]	2,0								
	h_{ef}=200 $\alpha_{g,V}$ ⊥	[-]	1,1								

fischer injection system FIS V Plus for masonry

Performance
Solid brick Mz, NF, dimensions, installation parameters c=60mm

Annex C 6

Electronic copy of the ETA by DIBt: ETA-20/0729

Solid brick Mz, NF, EN 771-1:2015

Table C7.1: Characteristic resistance under tension load for edge distance c=60mm

Anchor rod		M6		M8		M10			M12			M16			-		-	
Internal threaded anchor FIS E		-		-		-			-			-			M6	M8	M10	M12
															11x85		15x85	
$N_{Rk} = N_{Rk,p} = N_{Rk,b}$ [kN] depending on the compressive strength f_b (temperature range 50/80°C)																		
compressive strength f_b	use category	Effective anchorage depth h_{ef} [mm]																
		50	100	50	100	50	100	200	50	100	200	50	100	200	85			
12N/mm²	w/w w/d	1,5		2,0	2,0	2,0	2,5	-[1]	2,0	2,5	-[1]	2,0	5,5	-[1]	-[1]			
	d/d	2,5		3,0	4,0	3,0	4,0	9,5	3,0	4,0	9,5	3,0	8,5	9,5	-[1]			
20N/mm²	w/w w/d	2,0		2,5	3,0	2,5	3,5	-[1]	3,0	3,5	-[1]	3,0	7,5	-[1]	-[1]			
	d/d	3,5		4,5	5,5	4,5	5,5	12	4,5	5,5	12	4,5	12	12	-[1]			
28N/mm²	w/w w/d	2,5		3,0	4,0	3,0	4,0	-[1]	3,5	4,0	-[1]	3,5	9,0	-[1]	-[1]			
	d/d	4,0		5,5	6,5	5,5	6,5	12	5,5	6,5	12	5,5	12	12	-[1]			

[1] No performance assessed

Factor for temperature range 72/120°C: 0,83

Table C7.2: Characteristic resistance under shear load for edge distance c=60mm

Anchor rod		M6		M8		M10			M12			M16			-		-	
Internal threaded anchor FIS E		-		-		-			-			-			M6	M8	M10	M12
															11x85		15x85	
$V_{Rk} = V_{Rk,b} = V_{Rk,c}$ [kN] depending on the compressive strength f_b (temperature range 50/80°C and 72/120°C)																		
compressive strength f_b	use category	Effective anchorage depth h_{ef} [mm]																
		50	100	50	100	50	100	200	50	100	200	50	100	200	85			
12N/mm²	w/w w/d d/d	1,2	2,5	1,2	3,0	2,0	3,0	1,5	1,5	3,0	3,0	0,6	3,0	4,5	-[1]			
20N/mm²	w/w w/d d/d	1,5	3,5	1,5	4,5	3,0	4,5	2,5	2,0	4,5	4,5	0,9	4,5	6,0	-[1]			
28N/mm²	w/w w/d d/d	2,0	4,0	2,0	5,0	3,5	5,0	3,0	2,5	5,0	5,0	1,2	5,0	7,5	-[1]			

[1] No performance assessed

Factor for job site tests and displacements see annex C110

Electronic copy of the ETA by DIBt: ETA-20/0729

Solid brick Mz, 2DF, EN 771-1:2015

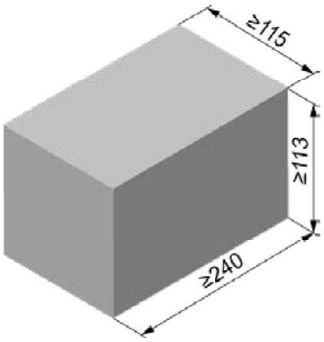

Solid brick Mz, 2DF, EN 771-1:2015			
Producer	e.g. Wienerberger		
Nominal dimensions [mm]	length L	width W	height H
	≥ 240	≥ 115	≥ 113
Density ρ [kg/dm³]	≥ 1,8		
Compressive strength f_b [N/mm²]	10 / 16		
Standard or annex	EN 771-1:2015		

Table C8.1: Installation parameters

Anchor rod			**M6**		**M8**		**M10**		**M12**		**M16**		**-**		**-**	
Internal threaded anchor FIS E			**-**		**-**		**-**		**-**		**-**		**M6**	**M8**	**M10**	**M12**
													11x85		**15x85**	
Anchor rod and internal threaded anchor FIS E without perforated sleeve																
Effective anchorage depth	h_{ef}	[mm]	50	100	50	100	50	100	50	100	50	100	85			
Max. installation torque	T_{inst}	[Nm]	4		10								4	10		
Anchor rod and internal threaded anchor FIS E with perforated sleeve FIS H 16x85 K																
Effective anchorage depth	h_{ef}	[mm]	-[1)]		85				-[1)]				85		-[1)]	
Max. installation torque	T_{inst}	[Nm]			10								4	10		
General installation parameters																
Edge distance	c_{min}	[mm]	60													
Spacing	s_{min} ∥	[mm]	120													
	s_{cr} ∥	[mm]	240													
	s_{cr} ⊥ = s_{min} ⊥	[mm]	115													
Drilling method																
Hammer drilling with hard metal hammer drill																

1) No performance assessed

Table C8.2: Group factors

Anchor rods		**M6**	**M8**	**M10**	**M12**	**M16**	**-**		**-**	
Internal threaded anchor FIS E		**-**	**-**	**-**	**-**	**-**	**M6**	**M8**	**M10**	**M12**
							11x85		**15x85**	
Group factor	$\alpha_{g,N}$ ∥ [-]	1,5								
	$\alpha_{g,V}$ ∥ [-]	1,4								
	$\alpha_{g,N}$ ⊥ [-]	2								
	$\alpha_{g,V}$ ⊥ [-]									

fischer injection system FIS V Plus for masonry

Performance
Solid brick Mz, 2DF, dimensions, installation parameters

Annex C 8

Electronic copy of the ETA by DIBt: ETA-20/0729

Solid brick Mz, 2DF, EN 771-1:2015

Table C9.1: Characteristic resistance under tension load

Anchor rod	M6	M8	M10	M12	M16	-		-		M8	M10	-	
Internal threaded anchor FIS E	-	-	-	-	-	M6	M8	M10	M12	-	-	M6	M8
						11x85		15x85				11x85	
Perforated sleeve FIS H K	-	-	-	-	-	-		-		16x85			

$N_{Rk} = N_{Rk,p} = N_{Rk,b}$ [kN] depending on the compressive strength f_b (temperature range 50/80°C)

compressive strength f_b	use category	Effective anchorage depth h_{ef} [mm]											
		50	100	50	100	50	100	50	100	50	100	85	
10N/mm²	w/w w/d	1,5	2,5	1,5	2,5	1,5	3	2	3,5	2	3,5	2	1,5
	d/d	3	4,0	3,0	4,0	3,0	4,5	3	5,5	3	5,5	3	3
16N/mm²	w/w w/d	2,5	4	2,5	4	2,5	4,5	3,5	5,5	3,5	5,5	3,5	2,5
	d/d	4,5	7,0	4,5	7,0	4,5	7,5	5,5	8	5,5	8	5,5	4,5

Factor for temperature range 72/120°C: 0,83

Table C9.2: Characteristic resistance under shear load

Anchor rod	M6	M8	M10	M12	M16	-		-		M8	M10	-	
Internal threaded anchor FIS E	-	-	-	-	-	M6	M8	M10	M12	-	-	M6	M8
						11x85		15x85				11x85	
Perforated sleeve FIS H K	-	-	-	-	-	-		-		16x85			

$V_{Rk} = V_{Rk,b} = V_{Rk,c}$ [kN] depending on the compressive strength f_b (temperature range 50/80°C and 72/120°C)

compressive strength f_b	use category	Effective anchorage depth h_{ef} [mm]												
		≥ 50					85							
10N/mm²	w/w w/d d/d	2,5	3,0	3,0	3,5	3,0	2,5	3,0	3,0	3,0	3,0	3,5	2,5	3,0
16N/mm²	w/w w/d d/d	4,0	5,0	5,5	5,5	5,0	4,0	5,0	5,0	5,0	5,0	6,0	4,0	5,0

Factor for job site tests and displacements see annex C110

Electronic copy of the ETA by DIBt: ETA-20/0729

Solid brick Mz, EN 771-1:2015

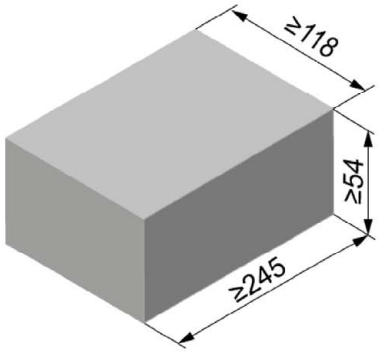

Solid brick Mz, EN 771-1:2015			
Producer	e.g. Nigra		
Nominal dimensions [mm]	length L	width W	height H
	≥ 245	≥ 118	≥ 54
Density ρ [kg/dm³]	≥ 1,8		
Compressive strength f_b [N/mm²]	10 / 20		
Standard or annex	EN 771-1:2015		

Table C10.1: Installation parameters

Anchor rod			**M6**		**M8**		**M10**		**M12**		**M16**		**-**		**-**	
Internal threaded anchor FIS E			**-**		**-**		**-**		**-**		**-**		**M6**	**M8**	**M10**	**M12**
													11x85		**15x85**	
Anchor rod and internal threaded anchor FIS E without perforated sleeve																
Effective anchorage depth	h_{ef}	[mm]	50	100	50	100	50	100	50	100	50	100	85			
Max. installation torque	T_{inst}	[Nm]	4		10								4	10		
General installation parameters																
Edge distance	c_{min}	[mm]	60													
Spacing	s_{cr} ∥ = s_{min} ∥	[mm]	245													
	s_{cr} ⊥ = s_{min} ⊥	[mm]	60													
Drilling method																
Hammer drilling with hard metal hammer drill																

Table C10.2: Group factors

Anchor rods			**M6**	**M8**	**M10**	**M12**	**M16**	**-**		**-**	
Internal threaded anchor FIS E			**-**	**-**	**-**	**-**	**-**	**M6**	**M8**	**M10**	**M12**
								11x85		**15x85**	
Group factor	$\alpha_{g,N}$ ∥	[-]	2								
	$\alpha_{g,V}$ ∥										
	$\alpha_{g,N}$ ⊥										
	$\alpha_{g,V}$ ⊥										

fischer injection system FIS V Plus for masonry

Performance
Solid brick Mz, dimensions, installation parameters

Annex C 10

Electronic copy of the ETA by DIBt: ETA-20/0729

Solid brick Mz, EN 771-1:2015

Table C11.1: Characteristic resistance under tension load

Anchor rod		M6	M8	M10	M12	M16	-	-
Internal threaded anchor FIS E		-	-	-	-	-	M6 / M8: 11x85	M10 / M12: 15x85
$N_{Rk} = N_{Rk,p} = N_{Rk,b}$ [kN] depending on the compressive strength f_b (temperature range 50/80°C)								
compressive strength f_b	use category	Effective anchorage depth h_{ef} [mm] ≥ 50					85	
10N/mm²	w/w, w/d	0,6	0,9	0,75	0,75	0,75	0,6	0,75
	d/d	1,2	1,5	1,2	1,2	1,2	1,2	1,2
20N/mm²	w/w, w/d	0,9	1,5	1,2	1,2	1,2	0,9	1,2
	d/d	1,5	2,5	2,0	2,0	2,0	1,5	2,0

Factor for temperature range 72/120°C: 0,83

Table C11.2: Characteristic resistance under shear load

Anchor rod		M6	M8	M10	M12	M16	-		-	
Internal threaded anchor FIS E		-	-	-	-	-	M6 / M8: 11x85		M10 / M12: 15x85	
$V_{Rk} = V_{Rk,b} = V_{Rk,c}$ [kN] depending on the compressive strength f_b (temperature range 50/80°C and 72/120°C)										
compressive strength f_b	use category	Effective anchorage depth h_{ef} [mm] ≥ 50					85			
10N/mm²	w/w, w/d, d/d	2,0	3,0	4,0	4,5	5,5	2,0	3,0	4,0	4,5
20N/mm²	w/w, w/d, d/d	2,5	4,0	5,5	6,0	8,0	2,5	4,0	5,5	6,0

Factor for job site tests and displacements see annex C110

Electronic copy of the ETA by DIBt: ETA-20/0729

Solid brick Mz, EN 771-1:2015

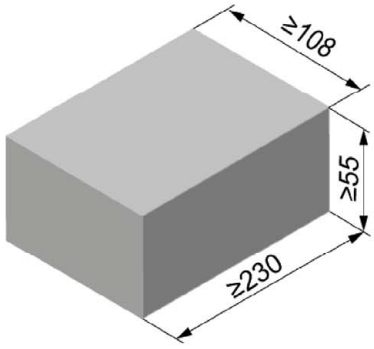

Solid brick Mz, EN 771-1:2015			
Producer	e.g. Wienerberger		
Nominal dimensions [mm]	length L	width W	height H
	≥ 230	≥ 108	≥ 55
Density ρ [kg/dm³]	≥ 1,8		
Compressive strength f_b [N/mm²]	10 / 20		
Standard or annex	EN 771-1:2015		

Table C12.1: Installation parameters

Anchor rod			**M6**		**M8**		**M10**		**M12**		**M16**		**-**		**-**	
Internal threaded anchor FIS E			**-**		**-**		**-**		**-**		**-**		**M6**	**M8**	**M10**	**M12**
													11x85		**15x85**	
Anchor rod and internal threaded anchor FIS E without perforated sleeve																
Effective anchorage depth	h_{ef}	[mm]	50	90	50	90	50	90	50	90	50	90	85			
Max. installation torque	T_{inst}	[Nm]	4		10								4		10	
General installation parameters																
Edge distance	c_{min}	[mm]	60													
Spacing	s_{cr} ∥ = s_{min} ∥	[mm]	230													
	s_{cr} ⊥ = s_{min} ⊥	[mm]	60													
Drilling method																
Hammer drilling with hard metal hammer drill																

Table C12.2: Group factors

Anchor rods			**M6**	**M8**	**M10**	**M12**	**M16**	**-**		**-**	
Internal threaded anchor FIS E			**-**	**-**	**-**	**-**	**-**	**M6**	**M8**	**M10**	**M12**
								11x85		**15x85**	
Group factor	$\alpha_{g,N}$ ∥	[-]	2								
	$\alpha_{g,V}$ ∥										
	$\alpha_{g,N}$ ⊥										
	$\alpha_{g,V}$ ⊥										

fischer injection system FIS V Plus for masonry

Performance
Solid brick Mz, dimensions, installation parameters

Annex C 12

Electronic copy of the ETA by DIBt: ETA-20/0729

Solid brick Mz, EN 771-1:2015

Table C13.1: Characteristic resistance under tension load

Anchor rod		**M6**	**M8**	**M10**	**M12**	**M16**	**-**		**-**	
Internal threaded anchor FIS E		-	-	-	-	-	**M6**	**M8**	**M10**	**M12**
							11x85		**15x85**	
$N_{Rk} = N_{Rk,p} = N_{Rk,b}$ [kN] depending on the compressive strength f_b (temperature range 50/80°C)										
compressive strength f_b	use category	Effective anchorage depth h_{ef} [mm] ≥ 50					85			
10N/mm²	w/w w/d	0,6	0,9	0,75	0,75	0,75	0,75			
	d/d	1,2	1,5	1,2	1,2	1,2	1,2			
20N/mm²	w/w w/d	0,9	1,5	1,2	1,2	1,2	1,2			
	d/d	1,5	2,5	2,0	2,0	2,0	2,0			

Factor for temperature range 72/120°C: 0,83

Table C13.2: Characteristic resistance under shear load

Anchor rod		**M6**	**M8**	**M10**	**M12**	**M16**	**-**		**-**	
Internal threaded anchor FIS E		-	-	-	-	-	**M6**	**M8**	**M10**	**M12**
							11x85		**15x85**	
$V_{Rk} = V_{Rk,b} = V_{Rk,c}$ [kN] depending on the compressive strength f_b (temperature range 50/80°C and 72/120°C)										
compressive strength f_b	use category	Effective anchorage depth h_{ef} [mm] ≥ 50					85			
10N/mm²	w/w w/d d/d	2,0	3,0	4,0	4,5	5,5	2,0	3,0	4,0	4,5
20N/mm²	w/w w/d d/d	2,5	4,0	5,5	6,0	8,0	2,5	4,0	5,5	6,0

Factor for job site tests and displacements see annex C110

fischer injection system FIS V Plus for masonry

Performance
Solid brick Mz, Characteristic resistance under tension and shear load

Annex C 13

Electronic copy of the ETA by DIBt: ETA-20/0729

Solid sand-lime brick KS, NF, EN 771-2:2015

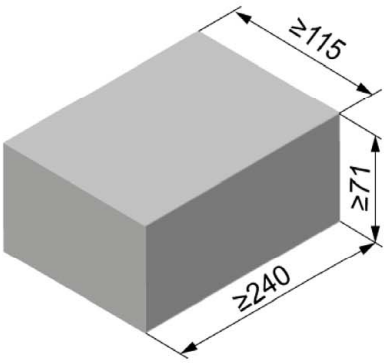

Solid sand-lime brick KS, NF, EN 771-2:2015			
Producer			
Nominal dimensions [mm]	length L	width W	height H
	≥ 240	≥ 115	≥ 71
Density ρ [kg/dm³]	≥ 1,8		
Compressive strength f_b [N/mm²]	12 / 20 / 28		
Standard or annex	EN 771-2:2015		

Table C14.1: Installation parameters

Anchor rod			**M6**		**M8**		**M10**		**M12**		**M16**		**-**		**-**	
Internal threaded anchor FIS E			**-**		**-**		**-**		**-**		**-**		**M6**	**M8**	**M10**	**M12**
													11x85		**15x85**	
Anchor rod and internal threaded anchor FIS E without perforated sleeve																
Effective anchorage depth	h_{ef}	[mm]	50	100	50	100	50	100	50	100	50	100	85		85	
							200		200		200					
Max. installation torque	T_{inst}	[Nm]	3		5		15		15		25		3	5	15	
General installation parameters																
Edge distance	c_{min}	[mm]	60													
Spacing	s_{min} ∥	[mm]	80													
	s_{cr} ∥	[mm]	80													
	s_{min} ⊥	[mm]	3x h_{ef}													
	s_{cr} ⊥	[mm]	3x h_{ef}													
Drilling method																
Hammer drilling with hard metal hammer drill																

Table C14.2: Group factors

Anchor rod			**M6**	**M8**	**M10**	**M12**	**M16**	**-**		**-**	
Internal threaded anchor FIS E			**-**	**-**	**-**	**-**	**-**	**M6**	**M8**	**M10**	**M12**
								11x85		**15x85**	
Group factor	$\alpha_{g,N}$ ∥	[-]	0,7								
	$\alpha_{g,V}$ ∥	[-]	1,3								
	$\alpha_{g,N}$ ⊥	[-]	2,0								
	$\alpha_{g,V}$ ⊥	[-]	2,0								

fischer injection system FIS V Plus for masonry

Performance
Solid sand-lime brick KS, NF, dimensions, installation parameters

Annex C 14

Electronic copy of the ETA by DIBt: ETA-20/0729

Solid sand-lime brick KS, NF, EN 771-2:2015

Table C15.1: Characteristic resistance under tension load

Anchor rod		**M6**		**M8**		**M10**			**M12**			**M16**			**-**		**-**	
Internal threaded anchor FIS E		**-**		**-**		**-**			**-**			**-**			**M6**	**M8**	**M10**	**M12**
															11x85		**15x85**	
$N_{Rk} = N_{Rk,p} = N_{Rk,b}$ [kN] depending on the compressive strength f_b (temperature range 50/80°C)																		
compressive strength f_b	use category	Effective anchorage depth h_{ef} [mm]																
		50	100	50	100	50	100	200	50	100	200	50	100	200	85		85	
12N/mm²	w/w w/d	2,0	3,0	2,5	4,5	2,5	3,5	7,0	2,5	3,0	6,5	2,5	3,5	8,0	2,5		2,5	
	d/d	4,0	5,5	4,0	8,0	4,0	5,5	12	4,0	4,5	12	4,5	5,5	12	4,0		4,0	
20N/mm²	w/w w/d	3,0	4,5	3,5	6,5	3,5	4,5	10	3,5	4,0	9,5	4,0	5,0	11	3,5		3,5	
	d/d	5,5	7,5	6,0	11	6,0	8,0	12	6,0	6,5	12	6,5	8,0	12	6,0		6,0	
28N/mm²	w/w w/d	3,5	5,0	4,0	8,0	4,5	5,5	12	4,5	5,0	11	4,5	5,5	12	4,5		4,5	
	d/d	6,5	9,0	7,0	12	7,0	9,0	12	7,0	7,5	12	7,5	9,5	12	7,0		7,0	

Factor for temperature range 72/120°C: 0,83

Table C15.2: Characteristic resistance under shear load

Anchor rod		**M6**		**M8**		**M10**		**M12**		**M16**		**-**		**-**	
Internal threaded anchor FIS E		**-**		**-**		**-**		**-**		**-**		**M6**	**M8**	**M10**	**M12**
												11x85		**15x85**	
$V_{Rk} = V_{Rk,b} = V_{Rk,c}$ [kN] depending on the compressive strength f_b (temperature range 50/80°C and 72/120°C)															
compressive strength f_b	use category	Effective anchorage depth h_{ef} [mm]													
		50	100	50	100	50	≥100	50	≥100	50	≥100	85		85	
12N/mm²	w/w w/d d/d	1,5	3,0	1,5	3,0	1,2	2,0	1,2	2,0	1,2	2,0	1,2		1,2	
20N/mm²	w/w w/d d/d	2,5	4,0	2,5	4,0	1,5	3,0	1,5	3,0	1,5	3,0	1,5		1,5	
28N/mm²	w/w w/d d/d	3,0	4,5	3,0	4,5	1,5	3,5	1,5	3,5	1,5	3,5	1,5		1,5	

Factor for job site tests and displacements see annex C110

Electronic copy of the ETA by DIBt: ETA-20/0729

Solid sand-lime brick KS, 8DF, EN 771-2:2015

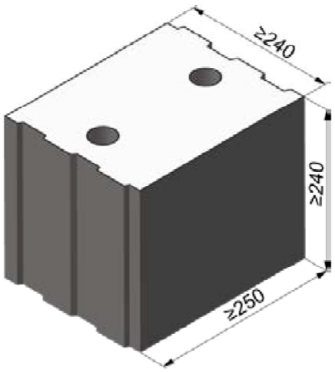

Solid sand-lime brick KS, 8DF, EN 771-2:2015			
Producer	-		
Nominal dimensions [mm]	length L	width W	height H
	≥ 250	≥ 240	≥ 240
Density ρ [kg/dm³]	≥ 2,0		
Compressive strength f_b [N/mm²]	10 / 20 / 28		
Standard or annex	EN 771-2:2015		

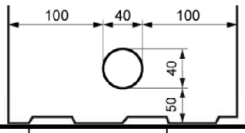

Dimension see also Annex B 15

Table C16.1: Installation parameters

Anchor rod			M6		M8		M10		M12		M16		-		-	
Internal threaded anchor FIS E			-		-		-		-		-		M6	M8	M10	M12
													11x85		15x85	
Anchor rod and internal threaded anchor FIS E without perforated sleeve																
Effective anchorage depth	h_{ef}	[mm]	50	100	50	100	50	100	50	100	50	100	85			
Max. installation torque	T_{inst}	[Nm]	4		10								4	10		
Anchor rod and internal threaded anchor FIS E with perforated sleeve FIS H 16x85 K																
Effective anchorage depth	h_{ef}	[mm]	-[1)]		85				-[1)]				85		-[1)]	
Max. installation torque	T_{inst}	[Nm]			10								4	10		
General installation parameters																
Edge distance	c_{min}	[mm]	60													
Spacing	s_{min} ∥	[mm]	80													
	s_{cr} ∥	[mm]	3x h_{ef}													
	s_{min} ⊥	[mm]	80													
	s_{cr} ⊥	[mm]	3x h_{ef}													
Drilling method																
Hammer drilling with hard metal hammer drill																

1) No performance assessed

Table C16.2: Group factors

Anchor rods			M6	M8	M10	M12	M16	-		-	
Internal threaded anchor FIS E			-	-	-	-	-	M6	M8	M10	M12
								11x85		15x85	
Group factors	$\alpha_{g,N}$ ∥	[-]	1,5								
	$\alpha_{g,V}$ ∥	[-]	1,2								
	$\alpha_{g,N}$ ⊥	[-]	1,5								
	$\alpha_{g,V}$ ⊥	[-]	1,2								

fischer injection system FIS V Plus for masonry

Performance
Solid sand-lime brick KS, 8DF, dimensions, installation parameters

Annex C 16

Electronic copy of the ETA by DIBt: ETA-20/0729

Solid sand-lime brick KS, 8DF, EN 771-2:2015

Table C17.1: Characteristic resistance under tension load

Anchor rod	M6	M8	M10	M12	M16	-	-	M8	M10	-
Internal threaded anchor FIS E	-	-	-	-	-	M6 M8 11x85	M10 M12 15x85	-	-	M6 M8 11x85
Perforated sleeve FIS H K	-	-	-	-	-	-	-	16x85		

$N_{Rk} = N_{Rk,p} = N_{Rk,b}$ [kN] depending on the compressive strength f_b (temperature range 50/80°C)

compressive strength f_b	use category	Effective anchorage depth h_{ef} [mm] ≥ 50					85				
10N/mm²	w/w w/d	3,0	4,0	4,5	4,5	3,5	3,0	3,5	4,5	3,0	4,5
	d/d	5,0	7,0	7,0	7,0	5,5	5,0	5,5	8,0	5,0	8,0
20N/mm²	w/w w/d	4,5	6,0	6,0	6,0	5,0	4,5	5,0	6,5	4,5	6,5
	d/d	7,5	10,0	10,0	10,0	7,5	7,5	7,5	11,0	7,5	11
28N/mm²	w/w w/d	5,0	8,0	8,5	8,5	7,0	5,0	7,0	8,5	5,0	8,5
	d/d	8,5	12,0	12,0	12,0	11,0	8,5	11,0	12,0	8,5	12

Factor for temperature range 72/120°C: 0,83

Table C17.2: Characteristic resistance under shear load

Anchor rod	M6	M8	M10	M12	M16	-	-	M8	M10	-
Internal threaded anchor FIS E	-	-	-	-	-	M6 M8 11x85	M10 M12 15x85	-	-	M6 M8 11x85
Perforated sleeve FIS H K	-	-	-	-	-	-	-	16x85		

$V_{Rk} = V_{Rk,b} = V_{Rk,c}$ [kN] depending on the compressive strength f_b (temperature range 50/80°C and 72/120°C)

compressive strength f_b	use category	Effective anchorage depth h_{ef} [mm] ≥ 50		85				
10N/mm²	w/w w/d d/d	2,5	4,5	2,5	4,5	4,5	2,5	4,5
20N/mm²	w/w w/d d/d	4,0	6,5	4,0	6,5	6,5	4,0	6,5
28N/mm²	w/w w/d d/d	5,0	9,0	5,0	9,0	9,0	5,0	9,0

Factor for job site tests and displacements see annex C110

Electronic copy of the ETA by DIBt: ETA-20/0729

Solid sand-lime brick KS, EN 771-2:2015

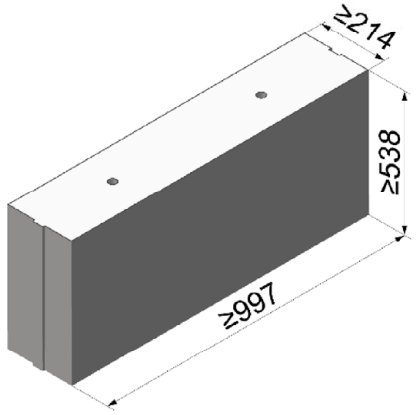

Solid sand-lime brick KS, EN 771-2:2015			
Producer	e.g. Calduran		
Nominal dimensions [mm]	length L	width W	height H
	≥ 997	≥ 214	≥ 538
Density ρ [kg/dm³]	1,8	2,2	
Compressive strength f_b [N/mm²]	10 / 20	36	
Standard or annex	EN 771-2:2015		

Table C18.1: Installation parameters

Anchor rod			M6		M8		M10		M12		M16		-		-	
Internal threaded anchor FIS E			-		-		-		-		-		M6	M8	M10	M12
													11x85		15x85	
Anchor rod and internal threaded anchor FIS E without perforated sleeve																
Effective anchorage depth	h_{ef}	[mm]	50	100	50	100	50	100	50	100	50	100	85			
Max. installation torque	T_{inst}	[Nm]	4		10								4	10		
General installation parameters																
Edge distance	c_{min}	[mm]	75													
Spacing	s_{cr} ∥ = s_{min} ∥	[mm]	3x h_{ef}													
	s_{cr} ⊥ = s_{min} ⊥	[mm]	3x h_{ef}													
Drilling method																
Hammer drilling with hard metal hammer drill																

Table C18.2: Group factors

Anchor rod			M6	M8	M10	M12	M16	-		-	
Internal threaded anchor FIS E			-	-	-	-	-	M6	M8	M10	M12
								11x85		15x85	
Group factors	$\alpha_{g,N}$ ∥	[-]	2								
	$\alpha_{g,V}$ ∥										
	$\alpha_{g,N}$ ⊥										
	$\alpha_{g,V}$ ⊥										

fischer injection system FIS V Plus for masonry

Performance
Solid sand-lime brick KS, dimensions, installation parameters

Annex C 18

Electronic copy of the ETA by DIBt: ETA-20/0729

Solid sand-lime brick KS, EN 771-2:2015

Table C19.1: Characteristic resistance under tension load

Anchor rod		M6	M8	M10	M12	M16	-	-
Internal threaded anchor FIS E		-	-	-	-	-	M6 / M8: 11x85	M10 / M12: 15x85
$N_{Rk} = N_{Rk,p} = N_{Rk,b}$ [kN] depending on the compressive strength f_b (temperature range 50/80°C)								
compressive strength f_b	use category	Effective anchorage depth h_{ef} [mm]						
		50 / 100	50 / 100	50 / 100	50 / 100	50 / 100	85	
10N/mm²	w/w, w/d	4,0	4,0 / 7,0	5,0 / 6,0	5,0 / 6,0	5,5 / 7,5	5,5	
	d/d	7,0	7,0 / 12,0	8,0 / 9,5	8,0 / 10,0	9,0 / 11,5	9,0	
20N/mm²	w/w, w/d	5,5	6,0 / 10,0	7,0 / 8,5	7,0 / 9,0	8,0 / 11,0	8,0	
	d/d	8,5	10,5 / 12,0	11,5 / 12,0	11,0 / 12,0	12,0 / 12,0	12,0	
36N/mm²	w/w, w/d	4,5	8,0 / 12,0	11,5 / 12,0	12,0 / 12,0	12,0 / 12,0	12,0	
	d/d	8,0	12,0 / 12,0	12,0 / 12,0	12,0 / 12,0	12,0 / 12,0	12,0	

Factor for temperature range 72/120°C: 0,83

Table C19.2: Characteristic resistance under shear load

Anchor rod		M6	M8	M10	M12	M16	-		-	
Internal threaded anchor FIS E		-	-	-	-	-	M6 / M8: 11x85		M10 / M12: 15x85	
$V_{Rk} = V_{Rk,b} = V_{Rk,c}$ [kN] depending on the compressive strength f_b (temperature range 50/80°C and 72/120°C)										
compressive strength f_b	use category	Effective anchorage depth h_{ef} [mm]								
		≥ 50					85			
10N/mm²	w/w, w/d, d/d	3,0	5,0	5,5	4,0	4,0	3,0	5,0	5,5	4,0
20N/mm²	w/w, w/d, d/d	4,5	7,0	7,5	6,0	6,0	4,5	7,0	7,5	6,0
36N/mm²	w/w, w/d, d/d	4,5	9,0	11,0	12,0	12,0	4,5	9,0	11,0	12,0

Factor for job site tests and displacements see annex C110

Electronic copy of the ETA by DIBt: ETA-20/0729

Perforated sand-lime brick KSL, 3DF, EN 771-2:2015

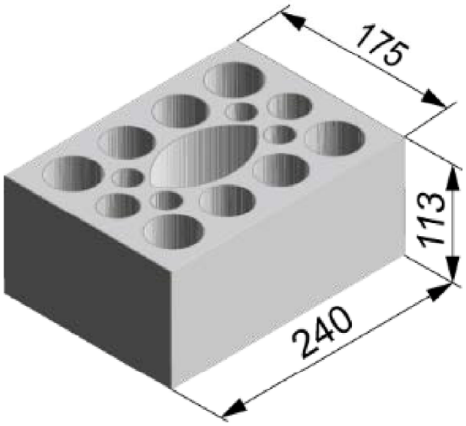

Perforated sand-lime brick KSL, 3DF, EN 771-2:2015			
Producer	e.g. KS Wemding		
Nominal dimensions [mm]	length L	width W	height H
	240	175	113
Density ρ [kg/dm³]	≥ 1,4		
Compressive strength f_b [N/mm²]	8 / 10 / 12 / 16 / 20		
Standard or annex	EN 771-2:2015		

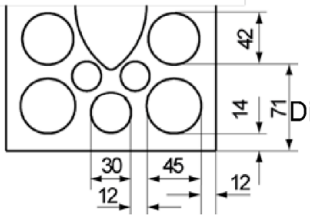

Dimension see also Annex B 15

Tabelle C20.1: Installation parameters
(Pre-positioned anchorage with perforated sleeve FIS H K)

Anchor rod			**M6**	**M8**	**M6**	**M8**	**-**		**M8**	**M10**	**M8**	**M10**	**-**		**M12**	**M16**	**M12**	**M16**
Internal threaded anchor FIS E			**-**		**-**		**M6**	**M8**	**-**		**-**		**M10**	**M12**	**-**		**-**	
							11x85						**15x85**					
Perforated sleeve FIS H K			**12x50**		**12x85**		**16x85**				**16x130**		**20x85**				**20x130**	
Anchor rod and internal threaded anchor FIS E with perforated sleeve FIS H K																		
Max. installation torque	T_{inst}	[Nm]	2															
General installation parameters																		
Edge distance	c_{min}	[mm]	60				80											
Spacing	s_{min} ∥	[mm]	100															
	s_{cr} ∥	[mm]	240															
	s_{min} ⊥	[mm]	115															
	s_{cr} ⊥	[mm]	115															
Drilling method																		
Hammer drilling with hard metal hammer drill																		

Table C20.2: Group factors

Anchor rod			**M6**	**M8**	**M6**	**M8**	**-**		**M8**	**M10**	**M8**	**M10**	**-**		**M12**	**M16**	**M12**	**M16**
Internal threaded anchor FIS E			**-**		**-**		**M6**	**M8**	**-**		**-**		**M10**	**M12**	**-**		**-**	
							11x85						**15x85**					
Perforated sleeve FIS H K			**12x50**		**12x85**		**16x85**				**16x130**		**20x85**				**20x130**	
Group factors	$\alpha_{g,N}$ ∥ = $\alpha_{g,V}$ ∥	[-]	1,5															
	$\alpha_{g,N}$ ⊥ = $\alpha_{g,V}$ ⊥	[-]	2,0															

fischer injection system FIS V Plus for masonry

Performance
Perforated sand-lime brick KSL, 3DF, dimensions, installation parameters

Annex C 20

Electronic copy of the ETA by DIBt: ETA-20/0729

Perforated sand-lime brick KSL, 3DF, EN 771-2:2015

Table C21.1: Installation parameters
(Push through anchorage with perforated sleeve FIS H K)

Anchor rod			**M10**	**M12**	**M16**
Perforated sleeve FIS H K			**18x130/200**		**22x130/200**
Anchor rod with perforated sleeve FIS H K					
Max. installation torque	T_{inst}	[Nm]	2		
General installation parameters					
Edge distance	c_{min}	[mm]	80		
Spacing	s_{min} ∥		100		
	s_{cr} ∥		240		
	s_{min} ⊥		115		
	s_{cr} ⊥		115		
Drilling method					
Hammer drilling with hard metal hammer drill					

Table C21.2: Group factors

Anchor rod			**M10**	**M12**	**M16**
Perforated sleeve FIS H K			**18x130/200**		**22x130/200**
Group factors	$\alpha_{g,N}$ ∥	[-]	1,5		
	$\alpha_{g,V}$ ∥				
	$\alpha_{g,N}$ ⊥		2,0		
	$\alpha_{g,V}$ ⊥				

fischer injection system FIS V Plus for masonry

Performance
Perforated sand-lime brick KSL, 3DF, dimensions, installation parameters

Annex C 21

Electronic copy of the ETA by DIBt: ETA-20/0729

Perforated sand-lime brick KSL, 3DF, EN 771-2:2015

Table C22.1: Characteristic resistance under tension load (Pre-positioned anchorage)

Anchor rod		**M6**	**M8**	**M6**	**M8**	**-**	**M8**	**M10**	**M8**	**M10**	**-**	**M12**	**M16**	**M12**	**M16**
Internal threaded anchor FIS E		**-**		**-**		**M6** / **11x85**	**M8** / **11x85**	**-**	**-**		**M10** / **15x85**	**M12** / **15x85**	**-**	**-**	
Perforated sleeve FIS H K		**12x50**		**12x85**		**16x85**			**16x130**		**20x85**			**20x130**	
$N_{Rk} = N_{Rk,p} = N_{Rk,b}$ [kN] depending on the compressive strength f_b (temperature range 50/80°C)															
compressive strength f_b	use category														
8 N/mm²	w/w w/d	1,5				2,0			2,0		2,0			2,0	
	d/d	1,5				2,0			2,5		2,5			2,5	
10 N/mm²	w/w w/d	2,0				2,0			2,5		2,5			2,5	
	d/d	2,0				2,5			3,0		3,0			3,0	
12 N/mm²	w/w w/d	2,5				2,5			3,0		3,0			3,0	
	d/d	2,5				3,0			3,5		3,5			3,5	
16 N/mm²	w/w w/d	3,0				3,5			4,5		4,5			4,5	
	d/d	3,5				4,0			4,5		4,5			4,5	
20 N/mm²	w/w w/d	4,0				4,5			5,5		5,5			5,5	
	d/d	4,5				5,0			6,0		6,0			6,0	

Table C22.2: Characteristic resistance under tension load (Push through anchorage)

Anchor rod		**M10**	**M12**	**M16**
Perforated sleeve FIS H K		**18x130/200**		**22x130/200**
$N_{Rk} = N_{Rk,p} = N_{Rk,b}$ [kN] depending on the compressive strength f_b (temperature range 50/80°C)				
compressive strength f_b	use category			
8 N/mm²	w/w w/d	2,0		
	d/d	2,5		
10 N/mm²	w/w w/d	2,5		
	d/d	3,0		
12 N/mm²	w/w w/d	3,0		
	d/d	3,5		
16 N/mm²	w/w w/d	4,5		
	d/d	4,5		
20 N/mm²	w/w w/d	5,5		
	d/d	6,0		

Factor for job site tests and displacements see annex C110

Factor for temperature range 72/120°C: 0,83

fischer injection system FIS V Plus for masonry

Performance
Perforated sand-lime brick KSL, 3DF, Characteristic resistance under tension load

Annex C 22

Electronic copy of the ETA by DIBt: ETA-20/0729

Perforated sand-lime brick KSL, 3DF, EN 771-2:2015

Table C23.1: Characteristic resistance under shear load (Pre-positioned anchorage)

Anchor rod		**M6**	**M8**	**M6**	**M8**	**-**	**M8**	**M10**	**M8**	**M10**	**-**	**M12**	**M16**	**M12**	**M16**
Internal threaded anchor FIS E		**-**		**-**		**M6 M8** / **11x85**	**-**		**-**		**M10 M12** / **15x85**	**-**		**-**	
Perforated sleeve FIS H K		**12x50**		**12x85**		**16x85**			**16x130**		**20x85**			**20x130**	
$V_{Rk} = V_{Rk,b} = V_{Rk,c}$ [kN] depending on the compressive strength f_b (temperature range 50/80°C and 72/120°C)															
compressive strength f_b	use category														
8 N/mm²	w/w w/d d/d	1,5					3,0					2,5	3,0	2,5	
10 N/mm²	w/w w/d d/d	2,0					3,5								
12 N/mm²	w/w w/d d/d	2,5					4,5					4,0	4,5	4,0	
16 N/mm²	w/w w/d d/d	3,0	3,5	3,0	3,5	3,0	6,0					5,5	6,0	5,5	
20 N/mm²	w/w w/d d/d	4,0	4,5	4,0	4,5	4,0	7,5					6,5	7,5	6,5	

Table C23.2: Characteristic resistance under shear load (Push through anchorage)

Anchor rod		**M10**	**M12**	**M16**
Perforated sleeve FIS H K		**18x130/200**		**22x130/200**
$V_{Rk} = V_{Rk,b} = V_{Rk,c}$ [kN] depending on the compressive strength f_b (temperature range 50/80°C and 72/120°C)				
compressive strength f_b	use category			
8 N/mm²	w/w w/d d/d	3,0		2,5
10 N/mm²	w/w w/d d/d	3,5		3,5
12 N/mm²	w/w w/d d/d	4,5		4,0
16 N/mm²	w/w w/d d/d	6,0		5,5
20 N/mm²	w/w w/d d/d	7,5		6,5

Factor for job site tests and displacements see annex C110

fischer injection system FIS V Plus for masonry

Performance
Perforated sand-lime brick KSL, 3DF, Characteristic resistance under shear load

Annex C 23

Electronic copy of the ETA by DIBt: ETA-20/0729

Vertical perforated brick HLz, EN 771-1:2015

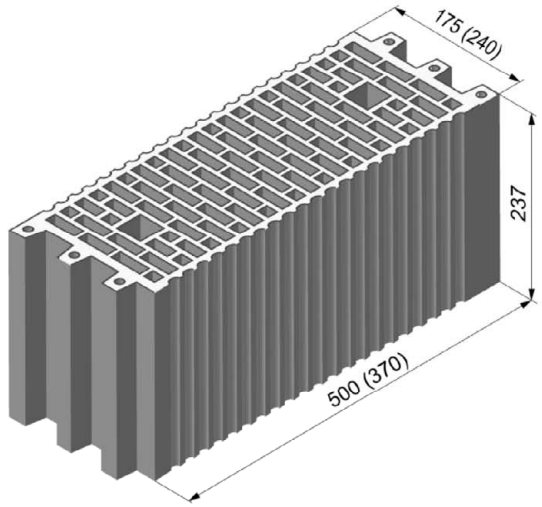

Vertical perforated brick HLz, EN 771-1:2015			
Producer	e.g. Wienerberger, Poroton		
Nominal dimensions [mm]	length L	width W	height H
	500	175	237
	370	240	237
Density ρ [kg/dm³]	≥ 1,0		
Compressive strength f_b [N/mm²]	4 / 6 / 8 / 10 / 12		
Standard or annex	EN 771-1:2015		

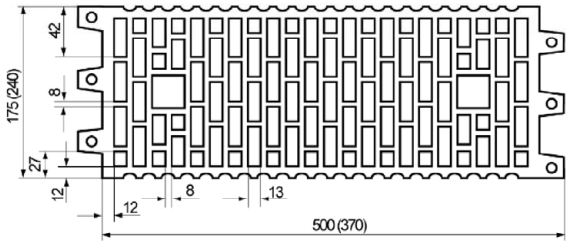

Dimension see also Annex B 15

Table C24.1: Installation parameters

Anchor rod			**M6**	**M8**	**M6**	**M8**	**-**	**M8**	**M10**	**M8**	**M10**	**-**	**M12**	**M16**	**M12**	**M16**
Internal threaded anchor FIS E			**-**		**-**		**M6 M8** / **11x85**	**-**		**-**		**M10 M12** / **15x85**	**-**		**-**	
Perforated sleeve FIS H K			**12x50**		**12x85**		**16x85**			**16x130**		**20x85**			**20x130**	
Anchor rod and internal threaded anchor FIS E with perforated sleeve FIS H K																
Max. installation torque	T_{inst}	[Nm]	2													
General installation parameters																
Edge distance	c_{min}	[mm]	100													
Spacing	s_{min} ∥	[mm]	100													
	s_{cr} ∥	[mm]	500 (370)													
	s_{min} ⊥	[mm]	100													
	s_{cr} ⊥	[mm]	240													
Drilling method																
Hammer drilling with hard metal hammer drill																

Table C24.2: Group factors

Anchor rod			**M6**	**M8**	**M6**	**M8**	**-**	**M8**	**M10**	**M8**	**M10**	**-**	**M12**	**M16**	**M12**	**M16**
Internal threaded anchor FIS E			**-**		**-**		**M6 M8** / **11x85**	**-**		**-**		**M10 M12** / **15x85**	**-**		**-**	
Perforated sleeve FIS H K			**12x50**		**12x85**		**16x85**			**16x130**		**20x85**			**20x130**	
Group factors	$\alpha_{g,N}$ ∥ = $\alpha_{g,V}$ ∥ / $\alpha_{g,N}$ ⊥ = $\alpha_{g,V}$ ⊥	[-]	1													

fischer injection system FIS V Plus for masonry

Performance
Vertical perforated brick HLz, dimensions, installation parameters

Annex C 24

Electronic copy of the ETA by DIBt: ETA-20/0729

Vertical perforated brick HLz, EN 771-1:2015

Table C25.1: Characteristic resistance under tension load

Anchor rod		**M6**	**M8**	**M6**	**M8**	**-**		**M8**	**M10**	**M8**	**M10**	**-**		**M12**	**M16**	**M12**	**M16**
Internal threaded anchor FIS E		**-**		**-**		**M6**	**M8**	**-**		**-**		**M10**	**M12**	**-**		**-**	
						11x85						**15x85**					
Perforated sleeve FIS H K		**12x50**		**12x85**		**16x85**				**16x130**		**20x85**				**20x130**	
$N_{Rk} = N_{Rk,p} = N_{Rk,b}$ [kN] depending on the compressive strength f_b (temperature range 50/80°C)																	
compressive strength f_b	use category																
4 N/mm²	w/w w/d	0,3				0,9										1,2	
	d/d	0,4				0,9										1,2	
6 N/mm²	w/w w/d	0,5				1,5										2,0	
	d/d	0,6				1,5										2,0	
8 N/mm²	w/w w/d	0,75				2,0										2,5	
	d/d	0,75				2,0										2,5	
10 N/mm²	w/w w/d	0,9				2,5										3,0	
	d/d	0,9				2,5										3,5	
12 N/mm²	w/w w/d	0,9				3,0										3,5	
	d/d	1,2				3,0										4,0	

Factor for temperature range 72/120°C: 0,83

Table C25.2: Characteristic resistance under shear load

Anchor rod		**M6**	**M8**	**M6**	**M8**	**-**		**M8**	**M10**	**M8**	**M10**	**-**		**M12**	**M16**	**M12**	**M16**
Internal threaded anchor FIS E		**-**		**-**		**M6**	**M8**	**-**		**-**		**M10**	**M12**	**-**		**-**	
						11x85						**15x85**					
Perforated sleeve FIS H K		**12x50**		**12x85**		**16x85**				**16x130**		**20x85**				**20x130**	
$V_{Rk} = V_{Rk,b} = V_{Rk,c}$ [kN] depending on the compressive strength f_b (temperature range 50/80°C and 72/120°C)																	
compressive strength f_b	use category																
4 N/mm²	w/w w/d d/d	0,5								0,6		0,5				0,6	
6 N/mm²	w/w w/d d/d	0,75								0,9		0,75				0,9	
8 N/mm²	w/w w/d d/d	0,9								1,2		0,9				1,2	
10 N/mm²	w/w w/d d/d	1,2								1,5		1,2				1,5	
12 N/mm²	w/w w/d d/d	1,5								2,0		1,5				2,0	

Factor for job site tests and displacements see annex C110

fischer injection system FIS V Plus for masonry

Performance
Vertical perforated brick HLz, Characteristic resistance under tension and shear load

Annex C 25

Electronic copy of the ETA by DIBt: ETA-20/0729

Vertical perforated brick HLz, 2DF, EN 771-1:2015

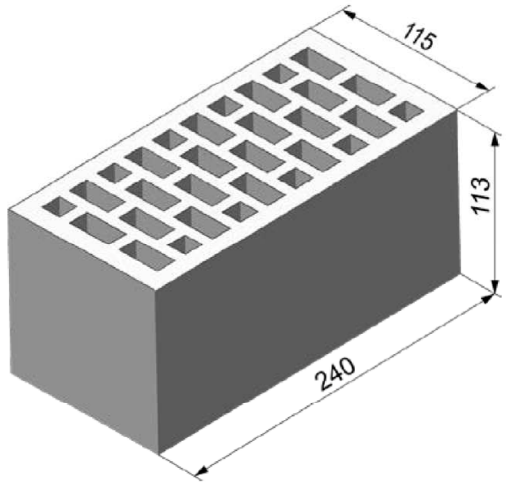

Vertical perforated brick HLz, 2DF, EN 771-1:2015			
Producer	e.g. Wienerberger		
Nominal dimensions [mm]	length L	width W	height H
	240	115	113
Density ρ [kg/dm³]	≥ 1,4		
Compressive strength f_b [N/mm²]	6 / 10 / 16 / 20 / 28		
Standard or annex	EN 771-1:2015		

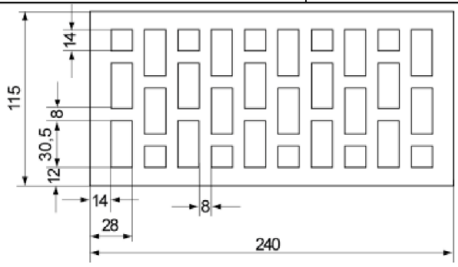

Dimension see also Annex B 15

Table C26.1: Installation parameters

Anchor rod		M6	M8	M6	M8	-		M8	M10	-		M12	M16
Internal threaded anchor FIS E		-		-		M6	M8	-		M10	M12	-	
						11x85				15x85			
Perforated sleeve FIS H K		12x50		12x85		16x85				20x85			
Anchor rod and internal threaded anchor FIS E with perforated sleeve FIS H K													
Max. installation torque	T_{inst} [Nm]	2											
General installation parameters													
Edge distance	c_{min} [mm]	80											
Spacing	s_{cr} ∥ = s_{min} ∥ [mm]	240											
	s_{cr} ⊥ = s_{min} ⊥ [mm]	115											
Drilling method													
Hammer drilling with hard metal hammer drill													

Table C26.2: Group factors

Anchor rod		M6	M8	M6	M8	-		M8	M10	-		M12	M16
Internal threaded anchor FIS E		-		-		M6	M8	-		M10	M12	-	
						11x85				15x85			
Perforated sleeve FIS H K		12x50		12x85		16x85				20x85			
Group factors	$\alpha_{g,N}$ ∥	2											
	$\alpha_{g,V}$ ∥												
	$\alpha_{g,N}$ ⊥												
	$\alpha_{g,V}$ ⊥	[-]											

fischer injection system FIS V Plus for masonry

Performance
Vertical perforated brick HLz, 2DF, dimensions, installation parameters

Annex C 26

Electronic copy of the ETA by DIBt: ETA-20/0729

Vertical perforated brick HLz, 2DF, EN 771-1:2015

Table C27.1: Characteristic resistance under tension load

Anchor rod		**M6**	**M8**	**M6**	**M8**	**-**		**M8**	**M10**	**-**		**M12**	**M16**
Internal threaded anchor FIS E		**-**		**-**		**M6**	**M8**	**-**		**M10**	**M12**	**-**	
						11x85				**15x85**			
Perforated sleeve FIS H K		**12x50**		**12x85**		**16x85**				**20x85**			
$N_{Rk} = N_{Rk,p} = N_{Rk,b}$ [kN] depending on the compressive strength f_b (temperature range 50/80°C)													
compressive strength f_b	use category												
6 N/mm²	w/w w/d	0,75		0,9		0,75				0,9			
	d/d	0,75		1,2		0,75				0,9			
10 N/mm²	w/w w/d	1,2		1,5		1,2				1,5			
	d/d	1,2		2,0		1,2				1,5			
16 N/mm²	w/w w/d	2,0		2,5		2,0				2,0			
	d/d	2,0		3,0		2,0				2,5			
20 N/mm²	w/w w/d	2,5		3,5		2,5				3,0			
	d/d	2,5		4,0		2,5				3,0			
28 N/mm²	w/w w/d	3,0		5,0		3,5				4,0			
	d/d	3,5		5,5		3,5				4,5			

Factor for temperature range 72/120°C: 0,83

Table C27.2: Characteristic resistance under shear load

Anchor rod		**M6**	**M8**	**M6**	**M8**	**-**		**M8**	**M10**	**-**		**M12**	**M16**
Internal threaded anchor FIS E		**-**		**-**		**M6**	**M8**	**-**		**M10**	**M12**	**-**	
						11x85				**15x85**			
Perforated sleeve FIS H K		**12x50**		**12x85**		**16x85**				**20x85**			
$V_{Rk} = V_{Rk,b} = V_{Rk,c}$ [kN] depending on the compressive strength f_b (temperature range 50/80°C and 72/120°C)													
compressive strength f_b	use category												
6 N/mm²	w/w w/d d/d	1,2	1,5	1,2	2,0	1,2		1,5		2,5			
10 N/mm²	w/w w/d d/d	2,0	2,5	2,0	4,0	2,0		2,5		4,5			
16 N/mm²	w/w w/d d/d	3,0	3,5	3,0	6,0	3,0		3,5		7,0			
20 N/mm²	w/w w/d d/d	4,0	4,5	4,0	7,5	4,0		4,5		8,5			
28 N/mm²	w/w w/d d/d	5,0	6,5	5,0	9,5	5,0		6,5		12,0			

Factor for job site tests and displacements see annex C110

fischer injection system FIS V Plus for masonry

Performance
Vertical perforated brick HLz, 2DF,
Characteristic resistance under tension and shear load

Annex C 27

Electronic copy of the ETA by DIBt: ETA-20/0729

Vertical perforated brick HLz, T8, EN 771-1:2015

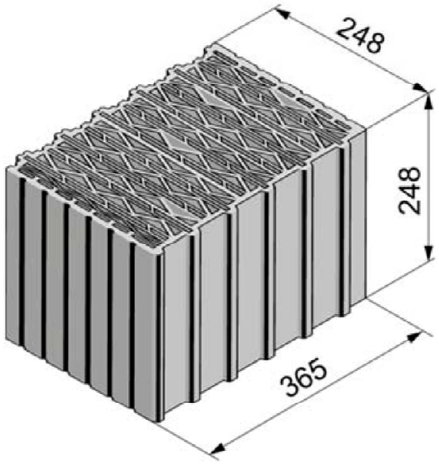

Vertical perforated brick HLz, T8, EN 771-1:2015			
Producer	-		
Nominal dimensions [mm]	length L	width W	height H
	248	365	248
Density ρ [kg/dm³]	0,6		
Compressive strength f_b [N/mm²]	4 / 6 / 8		
Standard or annex	EN 771-1:2015		

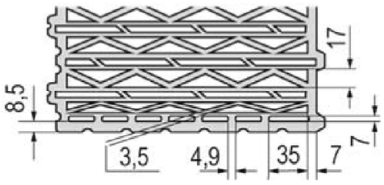

Dimension see also Annex B 15

Table C28.1: Installation parameters
(Pre-positioned anchorage with perforated sleeve FIS H K)

Anchor rod			**M6**	**M8**	**M6**	**M8**	**-**		**M8**	**M10**	**M8**	**M10**	**-**		**M12**	**M16**	**M12**	**M16**	**M12**	**M16**
Internal threaded anchor FIS E			-		-		**M6**	**M8**	-		-		**M10**	**M12**	-		-		-	
							11x85						**15x85**							
Perforated sleeve FIS H K			**12x50**		**12x85**		**16x85**				**16x130**		**20x85**				**20x130**		**20x200**	
Anchor rod and internal threaded anchor FIS E with perforated sleeve FIS H K																				
Max. installation torque	T_{inst}	[Nm]	3	5	3	5	3	5	5											
General installation parameters																				
Edge distance	c_{min}	[mm]	60																	
Spacing	s_{min} ∥	[mm]	80																	
	s_{cr} ∥	[mm]	250																	
	s_{min} ⊥	[mm]	80																	
	s_{cr} ⊥	[mm]	250																	
Drilling method																				
Rotary drilling with carbide drill																				

Table C28.2: Group factors

Anchor rod			**M6**	**M8**	**M6**	**M8**	**-**		**M8**	**M10**	**M8**	**M10**	**-**		**M12**	**M16**	**M12**	**M16**	**M12**	**M16**
Internal threaded anchor FIS E			-		-		**M6**	**M8**	-		-		**M10**	**M12**	-				-	
							11x85						**15x85**							
Perforated sleeve FIS H K			**12x50**		**12x85**		**16x85**				**16x130**		**20x85**				**20x130**		**20x200**	
Group factors	$\alpha_{g,N}$ ∥	[-]	1,3																	
	$\alpha_{g,V}$ ∥	[-]	1,2																	
	$\alpha_{g,N}$ ⊥	[-]	1,3																	
	$\alpha_{g,V}$ ⊥	[-]	1,0																	

fischer injection system FIS V Plus for masonry

Performance
Vertical perforated brick HLz, T8, dimensions, installation parameters

Annex C 28

Electronic copy of the ETA by DIBt: ETA-20/0729

Vertical perforated brick HLz, T8, EN 771-1:2015

Table C29.1: Installation parameters
(Push through anchorage with perforated sleeve FIS H K)

Anchor rod			**M10**	**M12**	**M16**
Perforated sleeve FIS H K			**18x130/200**		**22x130/200**
Anchor rod with perforated sleeve FIS H K					
Max. installation torque	T_{inst}	[Nm]	5		
General installation parameters					
Edge distance	c_{min}	[mm]	60		
Spacing	s_{min} ∥	[mm]	80		
	s_{cr} ∥	[mm]	250		
	s_{min} ⊥	[mm]	80		
	s_{cr} ⊥	[mm]	250		
Drilling method					
Rotary drilling with carbide drill					

Table C29.2: Group factors

Anchor rod			**M10**	**M12**	**M16**
Perforated sleeve FIS H K			**18x130/200**		**22x130/200**
Group factors	$\alpha_{g,N}$ ∥	[-]	1,3		
	$\alpha_{g,V}$ ∥	[-]	1,2		
	$\alpha_{g,N}$ ⊥	[-]	1,3		
	$\alpha_{g,V}$ ⊥	[-]	1,0		

Electronic copy of the ETA by DIBt: ETA-20/0729

Vertical perforated brick HLz, T8, EN 771-1:2015

Table C30.1: Characteristic resistance under tension load (Pre-positioned anchorage)

Anchor rod			**M6**	**M8**	**M6**	**M8**	**-**		**M8**	**M10**	**M8**	**M10**	**-**		**M12**	**M16**	**M12**	**M16**	**M12**	**M16**
Internal threaded anchor FIS E			**-**		**-**		**M6**	**M8**	**-**		**-**		**M10**	**M12**	**-**		**-**		**-**	
							11x85						**15x85**							
Perforated sleeve FIS H K			**12x50**		**12x85**		**16x85**				**16x130**		**20x85**				**20x130**		**20x200**	
$N_{Rk} = N_{Rk,p} = N_{Rk,b}$ [kN] depending on the compressive strength f_b (temperature range 50/80°C)																				
compressive strength f_b	use category																			
4 N/mm²	w/w	w/d	1,2								1,2									
	d/d		1,2								1,5									
6 N/mm²	w/w	w/d	1,5								1,5									
	d/d		1,5								1,5									
8 N/mm²	w/w	w/d	1,5								2,0									
	d/d		2,0								2,0									

Table C30.2: Characteristic resistance under tension load (Push through anchorage)

Anchor rod			**M10**	**M12**	**M16**
Perforated sleeve FIS H K			**18x130/200**		**22x130/200**
$N_{Rk} = N_{Rk,p} = N_{Rk,b}$ [kN] depending on the compressive strength f_b (temperature range 50/80°C)					
compressive strength f_b	use category				
4 N/mm²	w/w	w/d	1,2		
	d/d		1,5		
6 N/mm²	w/w	w/d	1,5		
	d/d		1,5		
8 N/mm²	w/w	w/d	2,0		
	d/d		2,0		

Factor for job site tests and displacements see annex C110

Factor for temperature range 72/120°C: 0,83

Electronic copy of the ETA by DIBt: ETA-20/0729

Vertical perforated brick HLz, T8, EN 771-1:2015

Table C31.1: Characteristic resistance under shear load (Pre-positioned anchorage)

Anchor rod	**M6**	**M8**	**M6**	**M8**	**-**	**M8**	**M10**	**M8**	**M10**	**-**	**M12**	**M16**	**M12**	**M16**	**M12**	**M16**
Internal threaded anchor FIS E	**-**		**-**		**M6 M8** / **11x85**	**-**		**-**		**M10 M12** / **15x85**	**-**		**-**		**-**	
Perforated sleeve FIS H K	**12x50**		**12x85**		**16x85**			**16x130**		**20x85**			**20x130**		**20x200**	
$V_{Rk} = V_{Rk,b} = V_{Rk,c}$ [kN] depending on the compressive strength f_b (temperature range 50/80°C and 72/120°C)																
compressive strength f_b	use category															
4 N/mm²	w/w	w/d														
	d/d															
6 N/mm²	w/w	w/d														
	d/d															
8 N/mm²	w/w	w/d														
	d/d															

1,2			
1,5			
1,5			

Table C31.2: Characteristic resistance under shear load (Push through anchorage)

Anchor rod	**M10**	**M12**	**M16**
Perforated sleeve FIS H K	**18x130/200**		**22x130/200**
$V_{Rk} = V_{Rk,b} = V_{Rk,c}$ [kN] depending on the compressive strength f_b (temperature range 50/80°C and 72/120°C)			
compressive strength f_b	use category		
4 N/mm²	w/w w/d d/d	1,2	
6 N/mm²	w/w w/d d/d	1,5	
8 N/mm²	w/w w/d d/d	1,5	

Factor for job site tests and displacements see annex C108

fischer injection system FIS V Plus for masonry

Performance
Vertical perforated brick HLz, T8, Characteristic resistance under shear load

Annex C 31

Electronic copy of the ETA by DIBt: ETA-20/0729

Vertical perforated brick HLz, T10, T11, EN 771-1:2015

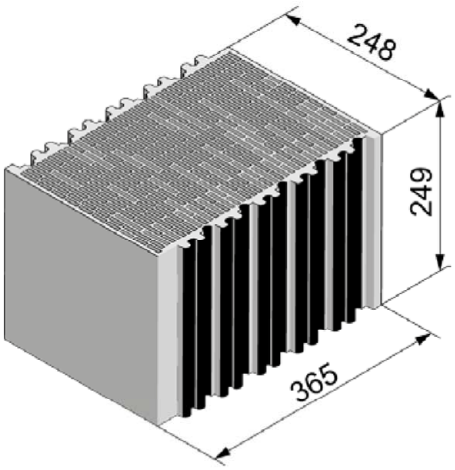

Vertical perforated brick HLz, T10, T11, EN 771-1:2015			
Producer	-		
Nominal dimensions [mm]	length L	width W	height H
	248	365	249
Density ρ [kg/dm³]	0,7		
Compressive strength f_b [N/mm²]	8 / 10 / 12		
Standard or annex	EN 771-1:2015		

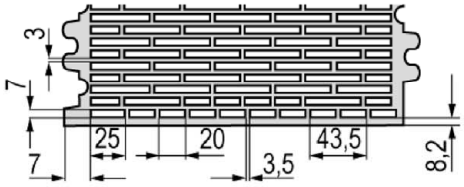

Dimension see also Annex B 16

Table C32.1: Installation parameters
(Pre-positioned anchorage with perforated sleeve FIS H K)

Anchor rod			**M6**	**M8**	**M6**	**M8**	**-**	**M8**	**M10**	**M8**	**M10**	**-**	**M12**	**M16**	**M12**	**M16**	**M12**	**M16**
Internal threaded anchor FIS E			-		-		**M6 M8** / **11x85**	-		-		**M10 M12** / **15x85**	-		-		-	
Perforated sleeve FIS H K			**12x50**		**12x85**		**16x85**			**16x130**		**20x85**			**20x130**		**20x200**	
Anchor rod and internal threaded anchor FIS E with perforated sleeve FIS H K																		
Max. installation torque	T_{inst}	[Nm]	3					5		3		5						
General installation parameters																		
Edge distance	c_{min}	[mm]	60															
Spacing	s_{min} ∥	[mm]	80															
	s_{cr} ∥	[mm]	250															
	s_{min} ⊥	[mm]	80															
	s_{cr} ⊥	[mm]	250															
Drilling method																		
Rotary drilling with carbide drill																		

Table C32.2: Group factors

Anchor rod			**M6**	**M8**	**M6**	**M8**	**-**	**M8**	**M10**	**M8**	**M10**	**-**	**M12**	**M16**	**M12**	**M16**	**M12**	**M16**
Internal threaded anchor FIS E			-		-		**M6 M8** / **11x85**	-		-		**M10 M12** / **15x85**	-		-		-	
Perforated sleeve FIS H K			**12x50**		**12x85**		**16x85**			**16x130**		**20x85**			**20x130**		**20x200**	
Group factors	$\alpha_{g,N}$ ∥	[-]	1,7															
	$\alpha_{g,V}$ ∥	[-]	0,5															
	$\alpha_{g,N}$ ⊥	[-]	1,3															
	$\alpha_{g,V}$ ⊥	[-]	0,5															

fischer injection system FIS V Plus for masonry

Performance
Vertical perforated brick HLz, T10, T11, dimensions, installation parameters

Annex C 32

Electronic copy of the ETA by DIBt: ETA-20/0729

Vertical perforated brick HLz, T10, T11, EN 771-1:2015

Table C33.1: Installation parameters
(Push through anchorage with perforated sleeve FIS H K)

Anchor rod			**M10**	**M12**	**M16**
Perforated sleeve FIS H K			**18x130/200**		**22x130/200**
Anchor rod with perforated sleeve FIS H K					
Max. installation torque	T_{inst}	[Nm]	5		
General installation parameters					
Edge distance	c_{min}	[mm]	60		
Spacing	s_{min} ∥	[mm]	80		
	s_{cr} ∥	[mm]	250		
	s_{min} ⊥	[mm]	80		
	s_{cr} ⊥	[mm]	250		
Drilling method					
Rotary drilling with carbide drill					

Table C33.2: Group factors

Anchor rod			**M10**	**M12**	**M16**
Perforated sleeve FIS H K			**18x130/200**		**22x130/200**
Group factors	$\alpha_{g,N}$ ∥	[-]	1,7		
	$\alpha_{g,V}$ ∥	[-]	0,5		
	$\alpha_{g,N}$ ⊥	[-]	1,3		
	$\alpha_{g,V}$ ⊥	[-]	0,5		

Electronic copy of the ETA by DIBt: ETA-20/0729

Vertical perforated brick HLz, T10, T11, EN 771-1:2015

Table C34.1: Characteristic resistance under tension load (Pre-positioned anchorage)

Anchor rod	**M6**	**M8**	**M6**	**M8**	**-**	**M8**	**M10**	**M8**	**M10**	**-**	**M12**	**M16**	**M12**	**M16**	**M12**	**M16**
Internal threaded anchor FIS E	**-**		**-**		**M6 M8** / **11x85**	**-**		**-**		**M10 M12** / **15x85**	**-**		**-**		**-**	
Perforated sleeve FIS H K	**12x50**		**12x85**		**16x85**			**16x130**		**20x85**			**20x130**		**20x200**	

$N_{Rk} = N_{Rk,p} = N_{Rk,b}$ [kN] depending on the compressive strength f_b (temperature range 50/80°C)				
compressive strength f_b	use category			
8 N/mm²	w/w	w/d	1,5	1,5
	d/d		1,5	2,0
10 N/mm²	w/w	w/d	1,5	2,0
	d/d		2,0	2,0
12 N/mm²	w/w	w/d	2,0	2,0
	d/d		2,0	2,5

Table C34.2: Characteristic resistance under tension load (Push through anchorage)

Anchor rod	**M10**	**M12**	**M16**
Perforated sleeve FIS H K	**18x130/200**		**22x130/200**

$N_{Rk} = N_{Rk,p} = N_{Rk,b}$ [kN] depending on the compressive strength f_b (temperature range 50/80°C)				
compressive strength f_b	use category			
8 N/mm²	w/w	w/d	1,5	1,5
	d/d		2,0	2,0
10 N/mm²	w/w	w/d	2,0	2,0
	d/d		2,0	2,0
12 N/mm²	w/w	w/d	2,0	2,0
	d/d		2,5	2,5

Factor for job site tests and displacements see annex C110

Factor for temperature range 72/120°C: 0,83

Electronic copy of the ETA by DIBt: ETA-20/0729

Vertical perforated brick HLz, T10, T11, EN 771-1:2015

Table C35.1: Characteristic resistance under shear load (Pre-positioned anchorage)

Anchor rod	**M6**	**M8**	**M6**	**M8**	**-**	**M8**	**M10**	**M8**	**M10**	**-**	**M12**	**M16**	**M12**	**M16**	**M12**	**M16**
Internal threaded anchor FIS E	**-**		**-**		**M6 M8** / **11x85**	**-**		**-**		**M10 M12** / **15x85**	**-**		**-**		**-**	
Perforated sleeve FIS H K	**12x50**		**12x85**		**16x85**			**16x130**		**20x85**			**20x130**		**20x200**	
$V_{Rk} = V_{Rk,b} = V_{Rk,c}$ [kN] depending on the compressive strength f_b (temperature range 50/80°C and 72/120°C)																
compressive strength **f_b**	use category															
8 N/mm²	w/w, w/d, d/d		0,9		1,5					2,0						
10 N/mm²	w/w, w/d, d/d		0,9		1,5					2,0						
12 N/mm²	w/w, w/d, d/d		1,2		2,0					2,0						

Table C35.2: Characteristic resistance under shear load (Push through anchorage)

Anchor rod	**M10**	**M12**	**M16**
Perforated sleeve FIS H K	**18x130/200**		**22x130/200**
$V_{Rk} = V_{Rk,b} = V_{Rk,c}$ [kN] depending on the compressive strength f_b (temperature range 50/80°C and 72/120°C)			
compressive strength **f_b**	use category		
8 N/mm²	w/w, w/d, d/d	1,5	2,0
10 N/mm²	w/w, w/d, d/d	1,5	2,0
12 N/mm²	w/w, w/d, d/d	2,0	2,0

Factor for job site tests and displacements see annex C110

Electronic copy of the ETA by DIBt: ETA-20/0729

Vertical perforated brick HLz, T7 PF, filled with perlit, EN 771-1:2015

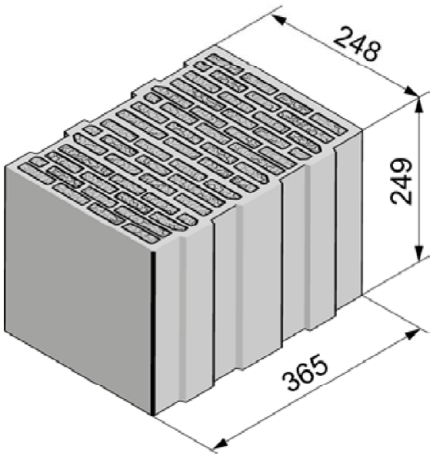

Vertical perforated brick HLz, T7 PF, filled with perlit, EN 771-1:2015			
Producer	-		
Nominal dimensions [mm]	length L	width W	height H
	248	365	249
Density ρ [kg/dm³]	0,5		
Compressive strength f_b [N/mm²]	4 / 6		
Standard or annex	EN 771-1:2015		

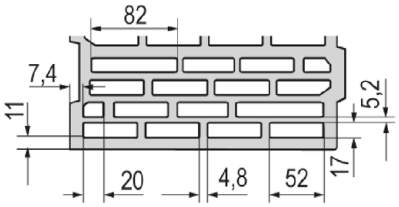

Dimension see also Annex B 16

Table C36.1: Installation parameters
(Pre-positioned anchorage with perforated sleeve FIS H K)

Anchor rod			**M6**	**M8**	**M6**	**M8**	**-**		**M8**	**M10**	**M8**	**M10**	**-**		**M12**	**M16**	**M12**	**M16**	**M12**	**M16**
Internal threaded anchor FIS E			**-**		**-**		**M6**	**M8**	**-**		**-**		**M10**	**M12**	**-**		**-**		**-**	
							11x85						**15x85**							
Perforated sleeve FIS H K			**12x50**		**12x85**		**16x85**				**16x130**		**20x85**				**20x130**		**20x200**	
Ankerstangen und Innengewindeanker FIS E mit Injektionsanker-Hülse FIS H K																				
Max. installation torque	T_{inst}	[Nm]	2						5		2		5							
General installation parameters																				
Edge distance	c_{min}	[mm]	60																	
Spacing	s_{min} ∥	[mm]	80																	
	s_{cr} ∥	[mm]	250																	
	s_{min} ⊥	[mm]	80																	
	s_{cr} ⊥	[mm]	250																	
Drilling method																				
Rotary drilling with carbide drill																				

Table C36.2: Group factors

Anchor rod			**M6**	**M8**	**M6**	**M8**	**-**		**M8**	**M10**	**M8**	**M10**	**-**		**M12**	**M16**	**M12**	**M16**	**M12**	**M16**
Internal threaded anchor FIS E			**-**		**-**		**M6**	**M8**	**-**		**-**		**M10**	**M12**	**-**		**-**		**-**	
							11x85						**15x85**							
Perforated sleeve FIS H K			**12x50**		**12x85**		**16x85**				**16x130**		**20x85**				**20x130**		**20x200**	
Group factors	$\alpha_{g,N}$ ∥	[-]	1,1																	
	$\alpha_{g,V}$ ∥	[-]	1,2																	
	$\alpha_{g,N}$ ⊥	[-]	1,1																	
	$\alpha_{g,V}$ ⊥	[-]	1,2																	

fischer injection system FIS V Plus for masonry

Performance
Vertical perforated brick HLz, T7 PF, filled with perlite, dimensions, installation parameters

Annex C 36

Electronic copy of the ETA by DIBt: ETA-20/0729

Vertical perforated brick HLz, T7 PF, filled with perlite, EN 771-1:2015

Table C37.1: Installation parameters
(Push through anchorage with perforated sleeve FIS H K)

Anchor rod			**M10**	**M12**	**M16**
Perforated sleeve FIS H K			**18x130/200**		**22x130/200**
Anchor rod with perforated sleeve FIS H K					
Max. installation torque	T_{inst}	[Nm]	5		
General installation parameters					
Edge distance	c_{min}	[mm]	60		
Spacing	s_{min} ∥	[mm]	80		
	s_{cr} ∥	[mm]	250		
	s_{min} ⊥	[mm]	80		
	s_{cr} ⊥	[mm]	250		
Drilling method					
Rotary drilling with carbide drill					

Table C37.2: Group factors

Anchor rod			**M10**	**M12**	**M16**
Perforated sleeve FIS H K			**18x130/200**		**22x130/200**
Group factors	$\alpha_{g,N}$ ∥	[-]	1,1		
	$\alpha_{g,V}$ ∥	[-]	1,2		
	$\alpha_{g,N}$ ⊥	[-]	1,1		
	$\alpha_{g,V}$ ⊥	[-]	1,2		

Electronic copy of the ETA by DIBt: ETA-20/0729

Vertical perforated brick HLz, T7 PF, filled with perlite, EN 771-1:2015

Table C38.1: Characteristic resistance under tension load (Pre-positioned anchorage)

Anchor rod			**M6**	**M8**	**M6**	**M8**	**-**	**M8**	**M10**	**M8**	**M10**	**-**	**M12**	**M16**	**M12**	**M16**	**M12**	**M16**
Internal threaded anchor FIS E			**-**		**-**		**M6 M8** / **11x85**	**-**		**-**		**M10 M12** / **15x85**	**-**		**-**		**-**	
Perforated sleeve FIS H K			**12x50**		**12x85**		**16x85**			**16x130**		**20x85**			**20x130**		**20x200**	
$N_{Rk} = N_{Rk,p} = N_{Rk,b}$ [kN] depending on the compressive strength f_b (temperature range 50/80°C)																		
compressive strength f_b	use category																	
4 N/mm²	w/w	w/d	1,2							1,2		1,2			1,2		2,0	
	d/d		1,5							1,5		1,5			1,5		2,0	
6 N/mm²	w/w	w/d	1,5							1,5		1,5			1,5		2,5	
	d/d		1,5							2,0		1,5			2,0		3,0	

Table C38.2: Characteristic resistance under tension load (Push through anchorage)

Anchor rod			**M10**	**M12**	**M16**
Perforated sleeve FIS H K			**18x130/200**		**22x130/200**
$N_{Rk} = N_{Rk,p} = N_{Rk,b}$ [kN] depending on the compressive strength f_b (temperature range 50/80°C)					
compressive strength f_b	use category				
4 N/mm²	w/w	w/d	1,2		1,2
	d/d		1,5		1,5
6 N/mm²	w/w	w/d	1,5		1,5
	d/d		2,0		2,0

Factor for job site tests and displacements see annex C110

Factor for temperature range 72/120°C: 0,83

Electronic copy of the ETA by DIBt: ETA-20/0729

Vertical perforated brick HLz, T7 PF, filled with perlite, EN 771-1:2015

Table C39.1: Characteristic resistance under shear load (Pre-positioned anchorage)

Anchor rod	**M6**	**M8**	**M6**	**M8**	**-**	**M8**	**M10**	**M8**	**M10**	**-**	**M12**	**M16**	**M12**	**M16**	**M12**	**M16**
Internal threaded anchor FIS E	**-**		**-**		**M6 M8** / **11x85**	**-**		**-**		**M10 M12** / **15x85**	**-**		**-**		**-**	
Perforated sleeve FIS H K	**12x50**		**12x85**		**16x85**			**16x130**		**20x85**			**20x130**		**20x200**	
$V_{Rk} = V_{Rk,b} = V_{Rk,c}$ [kN] depending on the compressive strength f_b (temperature range 50/80°C and 72/120°C)																
compressive strength **f_b**	use category															
4 N/mm²	w/w w/d d/d		0,9		1,5					1,2						
6 N/mm²	w/w w/d d/d		1,2		2,0					1,5						

Table C39.2: Characteristic resistance under shear load (Push through anchorage)

Anchor rod	**M10**	**M12**	**M16**
Perforated sleeve FIS H K	**18x130/200**		**22x130/200**
$V_{Rk} = V_{Rk,b} = V_{Rk,c}$ [kN] depending on the compressive strength f_b (temperature range 50/80°C and 72/120°C)			
compressive strength **f_b**	use category		
4 N/mm²	w/w w/d d/d	1,5	1,2
6 N/mm²	w/w w/d d/d	2,0	1,5

Factor for job site tests and displacements see annex C110

Electronic copy of the ETA by DIBt: ETA-20/0729

Vertical perforated brick HLz, S9 MW, filled with mineral wool, EN 771-1:2015

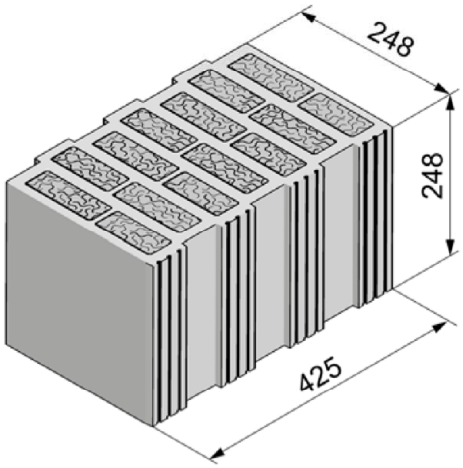

Vertical perforated brick HLz, S9 MW, filled with mineral wool, EN 771-1:2015			
Producer	-		
Nominal dimensions [mm]	length L	width W	height H
	248	425	248
Density ρ [kg/dm³]	0,8		
Compressive strength f_b [N/mm²]	4 / 6 / 8		
Standard or annex	EN 771-1:2015		

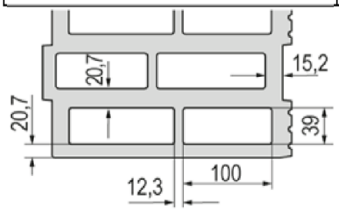

Dimension see also Annex B 16

Table C40.1: Installation parameters
(Pre-positioned anchorage with perforated sleeve FIS H K)

Anchor rod			**M6**	**M8**	**M6**	**M8**	**-**	**M8**	**M10**	**M8**	**M10**	**-**	**M12**	**M16**	**M12**	**M16**	**M12**	**M16**
Internal threaded anchor FIS E			-		-		**M6 M8** / **11x85**	-		-		**M10 M12** / **15x85**	-		-		-	
Perforated sleeve FIS H K			**12x50**		**12x85**		**16x85**			**16x130**		**20x85**			**20x130**		**20x200**	
Anchor rod and internal threaded anchor FIS E with perforated sleeve FIS H K																		
Max. installation torque	T_{inst}	[Nm]	3					5		3		5						
General installation parameters																		
Edge distance	c_{min}	[mm]	60															
Spacing	s_{min} ∥	[mm]	80															
	s_{cr} ∥	[mm]	250															
	s_{min} ⊥	[mm]	80															
	s_{cr} ⊥	[mm]	250															
Drilling method																		
Rotary drilling with carbide drill																		

Table C40.2: Group factors

Anchor rod			**M6**	**M8**	**M6**	**M8**	**-**	**M8**	**M10**	**M8**	**M10**	**-**	**M12**	**M16**	**M12**	**M16**	**M12**	**M16**
Internal threaded anchor FIS E			-		-		**M6 M8** / **11x85**	-		-		**M10 M12** / **15x85**	-		-		-	
Perforated sleeve FIS H K			**12x50**		**12x85**		**16x85**			**16x130**		**20x85**			**20x130**		**20x200**	
Group factors	$\alpha_{g,N}$ ∥	[-]	1,3															
	$\alpha_{g,V}$ ∥	[-]	1,2															
	$\alpha_{g,N}$ ⊥	[-]	0,6															
	$\alpha_{g,V}$ ⊥	[-]	1,2															

fischer injection system FIS V Plus for masonry

Performance
Vertical perforated brick HLz, S9 MW, filled with mineral wool, dimensions, installation parameters

Annex C 40

Electronic copy of the ETA by DIBt: ETA-20/0729

Vertical perforated brick HLz, S9 MW, filled with mineral wool, EN 771-1:2015

Table C41.1: Installation parameters
(Push through anchorage with perforated sleeve FIS H K)

Anchor rod			**M10**	**M12**	**M16**
Perforated sleeve FIS H K			**18x130/200**		**22x130/200**
Anchor rod with perforated sleeve FIS H K					
Max. installation torque	T_{inst}	[Nm]	5		
General installation parameters					
Edge distance	c_{min}	[mm]	60		
Spacing	s_{min} ∥	[mm]	80		
	s_{cr} ∥	[mm]	250		
	s_{min} ⊥	[mm]	80		
	s_{cr} ⊥	[mm]	250		
Drilling method					
Rotary drilling with carbide drill					

Table C41.2: Group factors

Anchor rod			**M10**	**M12**	**M16**
Perforated sleeve FIS H K			**18x130/200**		**22x130/200**
Group factors	$\alpha_{g,N}$ ∥	[-]	1,3		
	$\alpha_{g,V}$ ∥	[-]	1,2		
	$\alpha_{g,N}$ ⊥	[-]	0,6		
	$\alpha_{g,V}$ ⊥	[-]	1,2		

fischer injection system FIS V Plus for masonry

Performance
Vertical perforated brick HLz, S9 MW, filled with mineral wool, dimensions, installation parameters

Annex C 41

Electronic copy of the ETA by DIBt: ETA-20/0729

Vertical perforated brick HLz, S9 MW, filled with mineral wool, EN 771-1:2015

Table C42.1: Characteristic resistance under tension load (Pre-positioned anchorage)

Anchor rod		**M6**	**M8**	**M6**	**M8**	**-**		**M8**	**M10**	**M8**	**M10**	**-**		**M12**	**M16**	**M12**	**M16**	**M12**	**M16**
Internal threaded anchor FIS E		**-**		**-**		**M6**	**M8**	**-**		**-**		**M10**	**M12**	**-**		**-**		**-**	
						11x85						**15x85**							
Perforated sleeve FIS H K		**12x50**		**12x85**		**16x85**				**16x130**		**20x85**				**20x130**		**20x200**	
$N_{Rk} = N_{Rk,p} = N_{Rk,b}$ [kN] depending on the compressive strength f_b (temperature range 50/80°C)																			
compressive strength f_b	use category																		
4 N/mm²	w/w	w/d		1,5		2,0				3,0		2,5				4,0			
	d/d			2,0		2,5				3,0		2,5				4,5			
6 N/mm²	w/w	w/d		2,0		2,5				3,5		3,0				5,0			
	d/d			2,0		3,0				4,0		3,0				5,5			
8 N/mm²	w/w	w/d		2,5		3,0				4,0		3,5				6,0			
	d/d			2,5		3,0				4,5		3,5				6,5			

Table C42.2: Characteristic resistance under tension load (Push through anchorage)

Anchor rod		**M10**	**M12**	**M16**
Perforated sleeve FIS H K		**18x130/200**		**22x130/200**
$N_{Rk} = N_{Rk,p} = N_{Rk,b}$ [kN] depending on the compressive strength f_b (temperature range 50/80°C)				
compressive strength f_b	use category			
4 N/mm²	w/w w/d	3,0		4,0
	d/d	3,0		4,5
6 N/mm²	w/w w/d	3,5		5,0
	d/d	4,0		5,5
8 N/mm²	w/w w/d	4,0		6,0
	d/d	4,5		6,5

Factor for job site tests and displacements see annex C110

Factor for temperature range 72/120°C: 0,83

Electronic copy of the ETA by DIBt: ETA-20/0729

Vertical perforated brick HLz, S9 MW, filled with mineral wool, EN 771-1:2015

Table C43.1: Characteristic resistance under shear load (Pre-positioned anchorage)

Anchor rod		**M6**	**M8**	**M6**	**M8**	**-**		**M8**	**M10**	**M8**	**M10**	**-**		**M12**	**M16**	**M12**	**M16**	**M12**	**M16**
Internal threaded anchor FIS E		**-**		**-**		**M6**	**M8**	**-**		**-**		**M10**	**M12**	**-**		**-**		**-**	
						11x85						**15x85**							
Perforated sleeve FIS H K		**12x50**		**12x85**		**16x85**				**16x130**		**20x85**				**20x130**		**20x200**	
$V_{Rk} = V_{Rk,b} = V_{Rk,c}$ [kN] depending on the compressive strength f_b (temperature range 50/80°C and 72/120°C)																			
compressive strength f_b	use category																		
4 N/mm²	w/w / w/d / d/d	2,0		2,0						2,5		2,0						1,5	
6 N/mm²	w/w / w/d / d/d	2,5		2,5						3,0		2,5						2,0	
8 N/mm²	w/w / w/d / d/d	2,5		3,0						4,0		3,0						2,5	

Table C43.2: Characteristic resistance under shear load (Push through anchorage)

Anchor rod		**M10**	**M12**	**M16**
Perforated sleeve FIS H K		**18x130/200**		**22x130/200**
$V_{Rk} = V_{Rk,b} = V_{Rk,c}$ [kN] depending on the compressive strength f_b (temperature range 50/80°C and 72/120°C)				
compressive strength f_b	use category			
4 N/mm²	w/w / w/d / d/d	2,5		2,0
6 N/mm²	w/w / w/d / d/d	3,0		2,5
8 N/mm²	w/w / w/d / d/d	4,0		3,0

Factor for job site tests and displacements see annex C110

fischer injection system FIS V Plus for masonry

Performance
Vertical perforated brick HLz, S9 MW, filled with mineral wool;
Characteristic resistance under shear load

Annex C 43

Electronic copy of the ETA by DIBt: ETA-20/0729

Vertical perforated brick HLz, T7 MW, filled with mineral wool, EN 771-1:2015

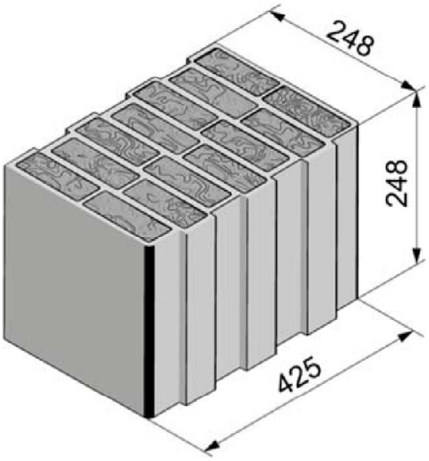

Vertical perforated brick HLz, T7 MW, filled with mineral wool, EN 771-1:2015			
Producer	-		
Nominal dimensions [mm]	length L	width W	height H
	248	425	248
Density ρ [kg/dm³]	0,6		
Compressive strength f_b [N/mm²]	4 / 6 / 8		
Standard or annex	EN 771-1:2015		

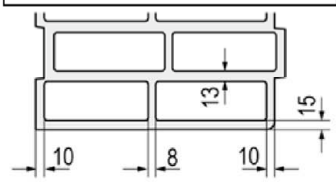

Dimension see also Annex B 16

Table C44.1: Installation parameters
(Pre-positioned anchorage with perforated sleeve FIS H K)

Anchor rod			**M6**	**M8**	**M6**	**M8**	**-**		**M8**	**M10**	**M8**	**M10**	**-**		**M12**	**M16**	**M12**	**M16**	**M12**	**M16**
Internal threaded anchor FIS E			-		-		**M6**	**M8**	-		-		**M10**	**M12**	-		-		-	
							11x85						**15x85**							
Perforated sleeve FIS H K			**12x50**		**12x85**		**16x85**				**16x130**		**20x85**				**20x130**		**20x200**	
Anchor rod and internal threaded anchor FIS E with perforated sleeve FIS H K																				
Max. installation torque	T_{inst}	[Nm]	2						5		2		5							
General installation parameters																				
Edge distance	c_{min}	[mm]	60																	
Spacing	s_{min} ∥	[mm]	80																	
	s_{cr} ∥	[mm]	250																	
	s_{min} ⊥	[mm]	80																	
	s_{cr} ⊥	[mm]	250																	
Drilling method																				
Rotary drilling with carbide drill																				

Table C44.2: Group factors

Anchor rod			**M6**	**M8**	**M6**	**M8**	**-**		**M8**	**M10**	**M8**	**M10**	**-**		**M12**	**M16**	**M12**	**M16**	**M12**	**M16**
Internal threaded anchor FIS E			-		-		**M6**	**M8**	-		-		**M10**	**M12**	-		-		-	
							11x85						**15x85**							
Perforated sleeve FIS H K			**12x50**		**12x85**		**16x85**				**16x130**		**20x85**				**20x130**		**20x200**	
Group factors	$\alpha_{g,N}$ ∥	[-]	1,9																	
	$\alpha_{g,V}$ ∥	[-]	0,9																	
	$\alpha_{g,N}$ ⊥	[-]	1,0																	
	$\alpha_{g,V}$ ⊥	[-]	0,7																	

fischer injection system FIS V Plus for masonry

Performance
Vertical perforated brick HLz, T7 MW, filled with mineral wool;
dimensions, installation parameters

Annex C 44

Electronic copy of the ETA by DIBt: ETA-20/0729

Vertical perforated brick HLz, T7 MW, filled with mineral wool, EN 771-1:2015

Table C45.1: Installation parameters
(Push through anchorage with perforated sleeve FIS H K)

Anchor rod			**M10**	**M12**	**M16**
Perforated sleeve FIS H K			**18x130/200**		**22x130/200**
Anchor rod with perforated sleeve FIS H K					
Max. installation torque	T_{inst}	[Nm]	5		
General installation parameters					
Edge distance	c_{min}	[mm]	60		
Spacing	s_{min} ∥	[mm]	80		
	s_{cr} ∥	[mm]	250		
	s_{min} ⊥	[mm]	80		
	s_{cr} ⊥	[mm]	250		
Drilling method					
Rotary drilling with carbide drill					

Table C45.2: Group factors

Anchor rod			**M10**	**M12**	**M16**
Perforated sleeve FIS H K			**18x130/200**		**22x130/200**
Group factors	$\alpha_{g,N}$ ∥	[-]	1,9		
	$\alpha_{g,V}$ ∥	[-]	0,9		
	$\alpha_{g,N}$ ⊥	[-]	1,0		
	$\alpha_{g,V}$ ⊥	[-]	0,7		

fischer injection system FIS V Plus for masonry

Performance
Vertical perforated brick HLz, T7 MW, filled with mineral wool;
dimensions, installation parameters

Annex C 45

Electronic copy of the ETA by DIBt: ETA-20/0729

Vertical perforated brick HLz, T7 MW, filled with mineral wool, EN 771-1:2015

Table C46.1: Characteristic resistance under tension load (Pre-positioned anchorage)

Anchor rod			**M6**	**M8**	**M6**	**M8**	**-**	**M8**	**M10**	**M8**	**M10**	**-**	**M12**	**M16**	**M12**	**M16**	**M12**	**M16**
Internal threaded anchor FIS E			**-**		**-**		**M6 M8** / **11x85**	**-**		**-**		**M10 M12** / **15x85**	**-**		**-**		**-**	
Perforated sleeve FIS H K			**12x50**		**12x85**		**16x85**			**16x130**		**20x85**			**20x130**		**20x200**	
$N_{Rk} = N_{Rk,p} = N_{Rk,b}$ [kN] depending on the compressive strength f_b (temperature range 50/80°C)																		
compressive strength f_b	use category																	
4 N/mm²	w/w	w/d	0,6		0,75		1,5			2,0		1,2			2,0		2,0	
	d/d		0,6		0,9		1,5			2,0		1,5			2,0		2,5	
6 N/mm²	w/w	w/d	0,75		0,9		1,5			2,0		1,5			2,5		2,5	
	d/d		0,9		0,9		2,0			2,5		2,0			2,5		3,0	
8 N/mm²	w/w	w/d	0,9		1,2		2,0			2,5		2,0			2,5		3,0	
	d/d		0,9		1,2		2,0			3,0		2,0			3,0		3,5	

Table C46.2: Characteristic resistance under tension load (Push through anchorage)

Anchor rod			**M10**	**M12**	**M16**
Perforated sleeve FIS H K			**18x130/200**		**22x130/200**
$N_{Rk} = N_{Rk,p} = N_{Rk,b}$ [kN] depending on the compressive strength f_b (temperature range 50/80°C)					
compressive strength f_b	use category				
4 N/mm²	w/w	w/d	2,0		2,0
	d/d		2,0		2,0
6 N/mm²	w/w	w/d	2,0		2,5
	d/d		2,5		2,5
8 N/mm²	w/w	w/d	2,5		2,5
	d/d		3,0		3,0

Factor for job site tests and displacements see annex C110

Factor for temperature range 72/120°C: 0,83

Electronic copy of the ETA by DIBt: ETA-20/0729

Vertical perforated brick HLz, T7 MW, filled with mineral wool, EN 771-1:2015

Table C47.1: Characteristic resistance under shear load (Pre-positioned anchorage)

Anchor rod		**M6**	**M8**	**M6**	**M8**	**-**		**M8**	**M10**	**M8**	**M10**	**-**		**M12**	**M16**	**M12**	**M16**	**M12**	**M16**
Internal threaded anchor FIS E		**-**		**-**		**M6**	**M8**	**-**		**-**		**M10**	**M12**	**-**		**-**		**-**	
						11x85						**15x85**							
Perforated sleeve FIS H K		**12x50**		**12x85**		**16x85**				**16x130**		**20x85**				**20x130**		**20x200**	
$V_{Rk} = V_{Rk,b} = V_{Rk,c}$ [kN] depending on the compressive strength f_b (temperature range 50/80°C and 72/120°C)																			
compressive strength f_b	use category																		
4 N/mm²	w/w / w/d / d/d	1,2				1,5												1,5	
6 N/mm²	w/w / w/d / d/d	1,5				2,0												1,5	
8 N/mm²	w/w / w/d / d/d	1,5				2,5												2,0	

Table C47.2: Characteristic resistance under shear load (Push through anchorage)

Anchor rod		**M10**	**M12**	**M16**
Perforated sleeve FIS H K		**18x130/200**		**22x130/200**
$V_{Rk} = V_{Rk,b} = V_{Rk,c}$ [kN] depending on the compressive strength f_b (temperature range 50/80°C and 72/120°C)				
compressive strength f_b	use category			
4 N/mm²	w/w / w/d / d/d	1,5		
6 N/mm²	w/w / w/d / d/d	2,0		
8 N/mm²	w/w / w/d / d/d	2,5		

Factor for job site tests and displacements see annex C110

fischer injection system FIS V Plus for masonry

Performance
Vertical perforated brick HLz, T7 MW, filled with mineral wool;
Characteristic resistance under shear load

Annex C 47

Electronic copy of the ETA by DIBt: ETA-20/0729

Vertical perforated brick HLz, EN 771-1:2015

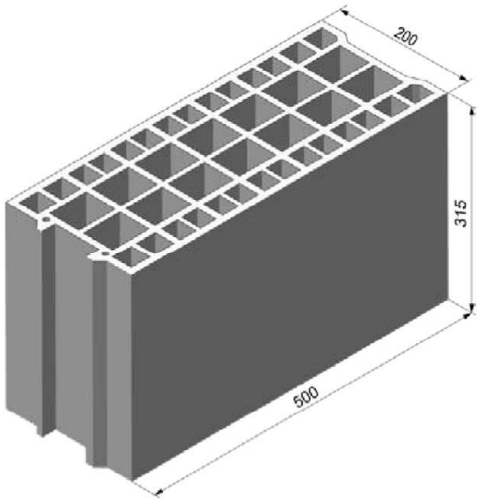

Vertical perforated brick HLz, EN 771-1:2015			
Producer	e.g. Bouyer Leroux		
Nominal dimensions [mm]	length L	width W	height H
	500	200	315
Density ρ [kg/dm³]	≥ 0,6		
Compressive strength f_b [N/mm²]	4 / 6 / 8		
Standard or annex	EN 771-1:2015		

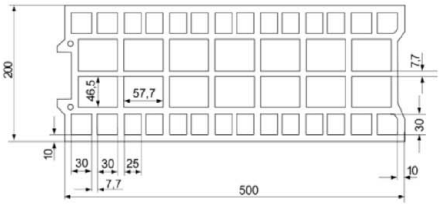

Dimension see also Annex B 16

Table C48.1: Installation parameters
(Pre-positioned anchorage with perforated sleeve FIS H K)

Anchor rod	**M6**	**M8**	**M6**	**M8**	**-**		**M8**	**M10**	**M8**	**M10**	**-**		**M12**	**M16**	**M12**	**M16**
Internal threaded anchor FIS E	**-**		**-**		**M6**	**M8**	**-**		**-**		**M10**	**M12**	**-**		**-**	
					11x85						**15x85**					
Perforated sleeve FIS H K	**12x50**		**12x85**		**16x85**				**16x130**		**20x85**				**20x130**	
Anchor rod and internal threaded anchor FIS E with perforated sleeve FIS H K																
Max. installation torque T_{inst} [Nm]	2															
General installation parameters																
Edge distance c_{min} [mm]	120															
Spacing s_{min} ∥ [mm]	120															
Spacing s_{cr} ∥ [mm]	500															
Spacing s_{min} ⊥ = s_{cr} ⊥ [mm]	315															
Drilling method																
Hammer drilling with hard metal hammer drill																

Table C48.2: Group factors

Anchor rod	**M6**	**M8**	**M6**	**M8**	**-**		**M8**	**M10**	**M8**	**M10**	**-**		**M12**	**M16**	**M12**	**M16**
Internal threaded anchor FIS E	**-**		**-**		**M6**	**M8**	**-**		**-**		**M10**	**M12**	**-**		**-**	
					11x85						**15x85**					
Perforated sleeve FIS H K	**12x50**		**12x85**		**16x85**				**16x130**		**20x85**				**20x130**	
Group factors $\alpha_{g,N}$ ∥ [-]	1,3															
Group factors $\alpha_{g,V}$ ∥ [-]	1,7															
Group factors $\alpha_{g,N}$ ⊥ = $\alpha_{g,V}$ ⊥ [-]	2															

fischer injection system FIS V Plus for masonry

Performance
Vertical perforated brick HLz, dimensions, installation parameters

Annex C 48

Electronic copy of the ETA by DIBt: ETA-20/0729

Vertical perforated brick HLz, EN 771-1:2015

Table C49.1: Installation parameters
(Push through anchorage with perforated sleeve FIS H K)

Anchor rod			**M10**	**M12**	**M16**
Perforated sleeve FIS H K			**18x130/200**		**22x130/200**
Anchor rod with perforated sleeve FIS H K					
Max. installation torque	T_{inst}	[Nm]	2		
General installation parameters					
Edge distance	c_{min}	[mm]	120		
Spacing	s_{min} II	[mm]	120		
	s_{cr} II	[mm]	500		
	$s_{min} \perp = s_{cr} \perp$	[mm]	315		
Drilling method					
Hammer drilling with hard metal hammer drill					

Table C49.2: Group factors

Anchor rod			**M10**	**M12**	**M16**
Perforated sleeve FIS H K			**18x130/200**		**22x130/200**
Group factors	$\alpha_{g,N}$ II	[-]	1,3		
	$\alpha_{g,V}$ II	[-]	1,7		
	$\alpha_{g,N} \perp = \alpha_{g,V} \perp$	[-]	2		

Electronic copy of the ETA by DIBt: ETA-20/0729

Vertical perforated brick HLz, EN 771-1:2015

Table C50.1: Characteristic resistance under tension load (Pre-positioned anchorage)

Anchor rod			**M6**	**M8**	**M6**	**M8**	**-**	**M8**	**M10**	**M8**	**M10**	**-**	**M12**	**M16**	**M12**	**M16**
Internal threaded anchor FIS E			**-**		**-**		**M6** / **11x85**	**M8**		**-**		**-**	**M10** / **15x85**	**M12**	**-**		**-**
Perforated sleeve FIS H K			**12x50**		**12x85**		**16x85**			**16x130**		**20x85**			**20x130**	
$N_{Rk} = N_{Rk,p} = N_{Rk,b}$ [kN] depending on the compressive strength f_b (temperature range 50/80°C)																
compressive strength f_b	use category															
4 N/mm²	w/w	w/d	0,5		1,5					0,75		1,5			1,5	
	d/d		0,6		1,5					0,9		1,5			2,0	
6 N/mm²	w/w	w/d	0,75		2,0					1,2		2,0			2,5	
	d/d		0,9		2,5					1,2		2,5			2,5	
8 N/mm²	w/w	w/d	0,9		3,0					1,5		3,0			3,5	
	d/d		1,2		3,0					2,0		3,0			3,5	

Table C50.2: Characteristic resistance under tension load (Push through anchorage)

Anchor rod			**M10**	**M12**	**M16**
Perforated sleeve FIS H K			**18x130/200**		**22x130/200**
$N_{Rk} = N_{Rk,p} = N_{Rk,b}$ [kN] depending on the compressive strength f_b (temperature range 50/80°C)					
compressive strength f_b	use category				
4 N/mm²	w/w	w/d	0,75		1,5
	d/d		0,9		2,0
6 N/mm²	w/w	w/d	1,2		2,5
	d/d		1,2		2,5
8 N/mm²	w/w	w/d	1,5		3,5
	d/d		2,0		3,5

Factor for job site tests and displacements see annex C110

Factor for temperature range 72/120°C: 0,83

Electronic copy of the ETA by DIBt: ETA-20/0729

Vertical perforated brick HLz, EN 771-1:2015

Table C51.1: Characteristic resistance under shear load (Pre-positioned anchorage)

Anchor rod	**M6**	**M8**	**M6**	**M8**	**-**		**M8**	**M10**	**M8**	**M10**	**-**		**M12**	**M16**	**M12**	**M16**
Internal threaded anchor FIS E	**-**		**-**		**M6**	**M8**	**-**		**-**		**M10**	**M12**	**-**		**-**	
					11x85						**15x85**					
Perforated sleeve FIS H K	**12x50**		**12x85**		**16x85**				**16x130**		**20x85**				**20x130**	
$V_{Rk} = V_{Rk,b} = V_{Rk,c}$ [kN] depending on the compressive strength f_b (temperature range 50/80°C and 72/120°C)																
compressive strength f_b	use category															
4 N/mm²	w/w	w/d														
	d/d								1,5					0,9	1,5	2,5	0,9
6 N/mm²	w/w	w/d														
	d/d								2,5					1,5	2,5	3,5	1,5
8 N/mm²	w/w	w/d														
	d/d								3,5					2,0	3,5	4,5	2,0

Table C51.2: Characteristic resistance under shear load (Push through anchorage)

Anchor rod	**M10**		**M12**		**M16**		
Perforated sleeve FIS H K	**18x130/200**				**22x130/200**		
$V_{Rk} = V_{Rk,b} = V_{Rk,c}$ [kN] depending on the compressive strength f_b (temperature range 50/80°C and 72/120°C)							
compressive strength f_b	use category						
4 N/mm²	w/w	w/d					
	d/d				0,9		
6 N/mm²	w/w	w/d					
	d/d				1,5		
8 N/mm²	w/w	w/d					
	d/d				2,0		

Factor for job site tests and displacements see annex C110

Electronic copy of the ETA by DIBt: ETA-20/0729

Vertical perforated brick HLz, EN 771-1:2015

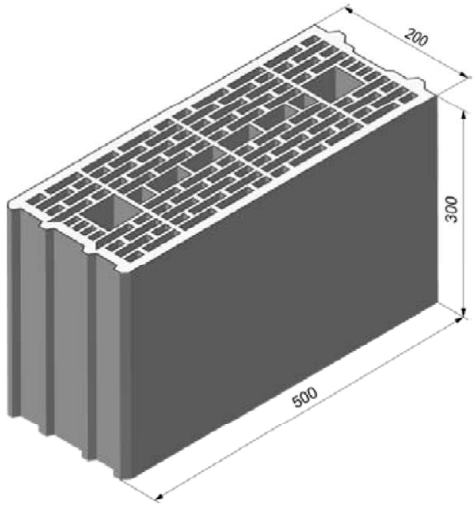

Vertical perforated brick HLz, EN 771-1:2015			
Producer	e.g. Wienerberger		
Nominal dimensions [mm]	length L	width W	height H
	500	200	300
Density ρ [kg/dm³]	≥ 0,7		
Compressive strength f_b [N/mm²]	4 / 6 / 8 / 10		
Standard or annex	EN 771-1:2015		

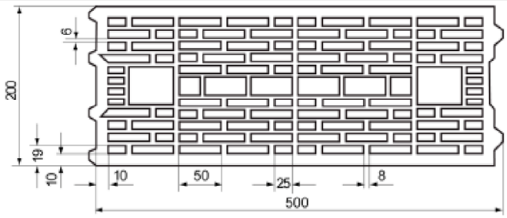

Dimension see also Annex B 17

Table C52.1: Installation parameters
(Pre-positioned anchorage with perforated sleeve FIS H K)

Anchor rod		**M6**	**M8**	**M6**	**M8**	**-**		**M8**	**M10**	**M8**	**M10**	**-**		**M12**	**M16**	**M12**	**M16**
Internal threaded anchor FIS E		**-**		**-**		**M6**	**M8**	**-**		**-**		**M10**	**M12**	**-**		**-**	
						11x85						**15x85**					
Perforated sleeve FIS H K		**12x50**		**12x85**		**16x85**				**16x130**		**20x85**				**20x130**	
Anchor rod and internal threaded anchor FIS E with perforated sleeve FIS H K																	
Max. installation torque	T_{inst} [Nm]	2															
General installation parameters																	
Edge distance	c_{min} [mm]	50								80				50		80	
Spacing	s_{min} ∥ [mm]	100															
	s_{cr} ∥ [mm]	500															
	s_{min} ⊥ = s_{cr} ⊥ [mm]	300															
Drilling method																	
Hammer drilling with hard metal hammer drill																	

Table C52.2: Group factors

Anchor rod		**M6**	**M8**	**M6**	**M8**	**-**		**M8**	**M10**	**M8**	**M10**	**-**		**M12**	**M16**	**M12**	**M16**
Internal threaded anchor FIS E		**-**		**-**		**M6**	**M8**	**-**		**-**		**M10**	**M12**	**-**		**-**	
						11x85						**15x85**					
Perforated sleeve FIS H K		**12x50**		**12x85**		**16x85**				**16x130**		**20x85**				**20x130**	
Group factors	$\alpha_{g,N}$ ∥ [-]	1,4															
	$\alpha_{g,V}$ ∥ [-]	2															
	$\alpha_{g,N}$ ⊥ = $\alpha_{g,V}$ ⊥ [-]																

fischer injection system FIS V Plus for masonry

Performance
Vertical perforated brick HLz, dimensions, installation parameters

Annex C 52

Electronic copy of the ETA by DIBt: ETA-20/0729

Vertical perforated brick HLz, EN 771-1:2015

Table C53.1: Installation parameters
(Push through anchorage with perforated sleeve FIS H K)

Anchor rod			**M10**	**M12**	**M16**
Perforated sleeve FIS H K			**18x130/200**		**22x130/200**
Anchor rod with perforated sleeve FIS H K					
Max. installation torque	T_{inst}	[Nm]	2		
General installation parameters					
Edge distance	c_{min}	[mm]	80		
Spacing	s_{min} II	[mm]	100		
	s_{cr} II	[mm]	500		
	$s_{min} \perp = s_{cr} \perp$	[mm]	300		
Drilling method					
Hammer drilling with hard metal hammer drill					

Table C53.2: Group factors

Anchor rod			**M10**	**M12**	**M16**
Perforated sleeve FIS H K			**18x130/200**		**22x130/200**
Group factors	$\alpha_{g,N}$ II	[-]	1,4		
	$\alpha_{g,V}$ II	[-]	2		
	$\alpha_{g,N} \perp = \alpha_{g,V} \perp$	[-]	2		

fischer injection system FIS V Plus for masonry

Performance
Vertical perforated brick HLz, dimensions, installation parameters

Annex C 53

Electronic copy of the ETA by DIBt: ETA-20/0729

Vertical perforated brick HLz, EN 771-1:2015

Table C54.1: Characteristic resistance under tension load (Pre-positioned anchorage)

Anchor rod		**M6**	**M8**	**M6**	**M8**	**-**	**M8**	**M10**	**M8**	**M10**	**-**	**M12**	**M16**	**M12**	**M16**
Internal threaded anchor FIS E		**-**		**-**		**M6** / **11x85**	**M8**		**-**		**-**	**M10** / **15x85**	**M12**	**-**		**-**
Perforated sleeve FIS H K		**12x50**		**12x85**		**16x85**			**16x130**		**20x85**			**20x130**	
$N_{Rk} = N_{Rk,p} = N_{Rk,b}$ [kN] depending on the compressive strength f_b (temperature range 50/80°C)															
compressive strength f_b	use category														
4 N/mm²	w/w	w/d		0,5		0,6			1,2		0,75			1,5	
	d/d			0,6		0,75			1,2		0,9			1,5	
6 N/mm²	w/w	w/d		0,75		0,9			1,5		1,2			2,0	
	d/d			0,9		1,2			2,0		1,2			2,5	
8 N/mm²	w/w	w/d		0,9		1,2			2,0		1,5			2,5	
	d/d			1,2		1,5			2,5		1,5			3,0	
10 N/mm²	w/w	w/d		1,2		1,5			2,5		2,0			3,5	
	d/d			1,5		2,0			3,0		2,0			4,0	

Table C54.2: Characteristic resistance under tension load (Push through anchorage)

Anchor rod		**M10**	**M12**	**M16**
Perforated sleeve FIS H K		**18x130/200**		**22x130/200**
$N_{Rk} = N_{Rk,p} = N_{Rk,b}$ [kN] depending on the compressive strength f_b (temperature range 50/80°C)				
compressive strength f_b	use category			
4 N/mm²	w/w w/d	1,2		1,5
	d/d	1,2		1,5
6 N/mm²	w/w w/d	1,5		2,0
	d/d	2,0		2,5
8 N/mm²	w/w w/d	2,0		2,5
	d/d	2,5		3,0
10 N/mm²	w/w w/d	2,5		3,5
	d/d	3,0		4,0

Factor for job site tests and displacements see annex C110

Factor for temperature range 72/120°C: 0,83

Electronic copy of the ETA by DIBt: ETA-20/0729

Vertical perforated brick HLz, EN 771-1:2015

Table C55.1: Characteristic resistance under shear load (Pre-positioned anchorage)

Anchor rod		**M6**	**M8**	**M6**	**M8**	**-**		**M8**	**M10**	**M8**	**M10**	**-**		**M12**	**M16**	**M12**	**M16**
Internal threaded anchor FIS E		**-**		**-**		**M6**	**M8**	**-**		**-**		**M10**	**M12**	**-**		**-**	
						11x85						**15x85**					
Perforated sleeve FIS H K		**12x50**		**12x85**		**16x85**				**16x130**		**20x85**				**20x130**	
$V_{Rk} = V_{Rk,b} = V_{Rk,c}$ [kN] depending on the compressive strength f_b (temperature range 50/80°C and 72/120°C)																	
compressive strength f_b	use category																
4 N/mm²	w/w w/d d/d	0,9		1,2		0,9		1,2		0,6		2,0				0,6	
6 N/mm²	w/w w/d d/d	1,2		1,5		1,2		1,5		0,9		3,0				0,9	
8 N/mm²	w/w w/d d/d	1,5		2,0		1,5		2,0		1,2		4,0				1,2	
10 N/mm²	w/w w/d d/d	2,0		3,0		2,0		3,0		1,5		5,0				1,5	

Table C55.2: Characteristic resistance under shear load (Push through anchorage)

Anchor rod		**M10**	**M12**	**M16**
Perforated sleeve FIS H K		**18x130/200**		**22x130/200**
$V_{Rk} = V_{Rk,b} = V_{Rk,c}$ [kN] depending on the compressive strength f_b (temperature range 50/80°C and 72/120°C)				
compressive strength f_b	use category			
4 N/mm²	w/w w/d d/d	0,6		
6 N/mm²	w/w w/d d/d	0,9		
8 N/mm²	w/w w/d d/d	1,2		
10 N/mm²	w/w w/d d/d	1,5		

Factor for job site tests and displacements see annex C110

fischer injection system FIS V Plus for masonry

Performance
Vertical perforated brick HLz, Characteristic resistance under shear load

Annex C 55

Electronic copy of the ETA by DIBt: ETA-20/0729

Vertical perforated brick HLz, EN 771-1:2015

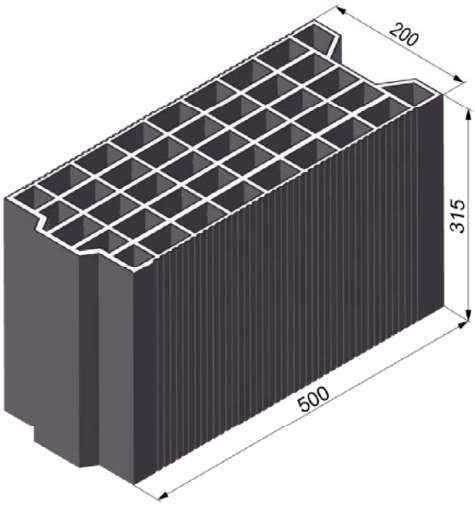

Vertical perforated brick HLz, EN 771-1:2015			
Producer	e.g. Terreal		
Nominal dimensions [mm]	length L	width W	height H
	500	200	315
Density ρ [kg/dm³]	≥ 0,7		
Compressive strength f_b [N/mm²]	2 / 4 / 6 / 8		
Standard or annex	EN 771-1:2015		

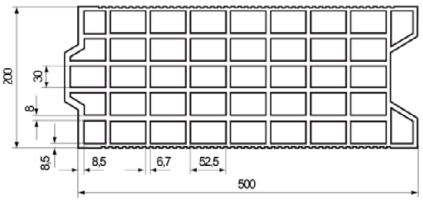

Dimension see also Annex B 17

Table C56.1: Installation parameters
(Pre-positioned anchorage with perforated sleeve FIS H K)

Anchor rod			**M6**	**M8**	**M6**	**M8**	**-**		**M8**	**M10**	**M8**	**M10**	**-**		**M12**	**M16**	**M12**	**M16**
Internal threaded anchor FIS E			**-**		**-**		**M6**	**M8**	**-**		**-**		**M10**	**M12**	**-**		**-**	
							11x85						**15x85**					
Perforated sleeve FIS H K			**12x50**		**12x85**		**16x85**				**16x130**		**20x85**				**20x130**	
Anchor rod and internal threaded anchor FIS E with perforated sleeve FIS H K																		
Max. installation torque	T_{inst}	[Nm]	2															
General installation parameters																		
Edge distance	c_{min}	[mm]	50								80		50				80	
Spacing	s_{min} ∥	[mm]	100															
	s_{cr} ∥	[mm]	500															
	s_{min} ⊥	[mm]	100															
	s_{cr} ⊥	[mm]	315															
Drilling method																		
Hammer drilling with hard metal hammer drill																		

Table C56.2: Group factors

Anchor rod			**M6**	**M8**	**M6**	**M8**	**-**		**M8**	**M10**	**M8**	**M10**	**-**		**M12**	**M16**	**M12**	**M16**
Internal threaded anchor FIS E			**-**		**-**		**M6**	**M8**	**-**		**-**		**M10**	**M12**	**-**		**-**	
							11x85						**15x85**					
Perforated sleeve FIS H K			**12x50**		**12x85**		**16x85**				**16x130**		**20x85**				**20x130**	
Group factors	$\alpha_{g,N}$ ∥	[-]	1,1															
	$\alpha_{g,V}$ ∥	[-]	1,2															
	$\alpha_{g,N}$ ⊥	[-]	1,1															
	$\alpha_{g,V}$ ⊥	[-]	1,2															

fischer injection system FIS V Plus for masonry

Performance
Vertical perforated brick HLz, dimensions, installation parameters

Annex C 56

Electronic copy of the ETA by DIBt: ETA-20/0729

Vertical perforated brick HLz, EN 771-1:2015

Table C57.1: Installation parameters
(Push through anchorage with perforated sleeve FIS H K)

Anchor rod			**M10**	**M12**	**M16**
Perforated sleeve FIS H K			**18x130/200**		**22x130/200**
Anchor rod with perforated sleeve FIS H K					
Max. installation torque	T_{inst}	[Nm]	2		
General installation parameters					
Edge distance	c_{min}	[mm]	80		
Spacing	s_{min} ∥	[mm]	100		
	s_{cr} ∥	[mm]	500		
	s_{min} ⊥	[mm]	100		
	s_{cr} ⊥	[mm]	315		
Drilling method					
Hammer drilling with hard metal hammer drill					

Table C57.2: Group factors

Anchor rod			**M10**	**M12**	**M16**
Perforated sleeve FIS H K			**18x130/200**		**22x130/200**
Group factors	$\alpha_{g,N}$ ∥	[-]	1,1		
	$\alpha_{g,V}$ ∥	[-]	1,2		
	$\alpha_{g,N}$ ⊥	[-]	1,1		
	$\alpha_{g,V}$ ⊥	[-]	1,2		

Electronic copy of the ETA by DIBt: ETA-20/0729

Vertical perforated brick HLz, EN 771-1:2015

Table C58.1: Characteristic resistance under tension load (Pre-positioned anchorage)

Anchor rod		**M6**	**M8**	**M6**	**M8**	**-**		**M8**	**M10**	**M8**	**M10**	**-**		**M12**	**M16**	**M12**	**M16**
Internal threaded anchor FIS E		**-**		**-**		**M6**	**M8**	**-**		**-**		**M10**	**M12**	**-**		**-**	
						11x85						**15x85**					
Perforated sleeve FIS H K		**12x50**		**12x85**		**16x85**				**16x130**		**20x85**				**20x130**	
$N_{Rk} = N_{Rk,p} = N_{Rk,b}$ [kN] depending on the compressive strength f_b (temperature range 50/80°C)																	
compressive strength f_b	use category																
2 N/mm²	w/w	w/d				0,5											
	d/d			0,5						0,6		0,5				0,6	
4 N/mm²	w/w	w/d				0,9											
	d/d			0,9		1,2											
6 N/mm²	w/w	w/d				1,5											
	d/d					1,5											
8 N/mm²	w/w	w/d				2,0											
	d/d					2,0											

Table C58.2: Characteristic resistance under tension load (Push through anchorage)

Anchor rod		**M10**	**M12**	**M16**
Perforated sleeve FIS H K		**18x130/200**		**22x130/200**
$N_{Rk} = N_{Rk,p} = N_{Rk,b}$ [kN] depending on the compressive strength f_b (temperature range 50/80°C)				
compressive strength f_b	use category			
2 N/mm²	w/w w/d	0,5		
	d/d	0,6		
4 N/mm²	w/w w/d	0,9		
	d/d	1,2		
6 N/mm²	w/w w/d	1,5		
	d/d	1,5		
8 N/mm²	w/w w/d	2,0		
	d/d	2,0		

Factor for job site tests and displacements see annex C110

Factor for temperature range 72/120°C: 0,83

Electronic copy of the ETA by DIBt: ETA-20/0729

Vertical perforated brick HLz, EN 771-1:2015

Table C59.1: Characteristic resistance under shear load (Pre-positioned anchorage)

Anchor rod		**M6**	**M8**	**M6**	**M8**	**-**		**M8**	**M10**	**M8**	**M10**	**-**		**M12**	**M16**	**M12**	**M16**
Internal threaded anchor FIS E		**-**		**-**		**M6**	**M8**	**-**		**-**		**M10**	**M12**	**-**		**-**	
						11x85						**15x85**					
Perforated sleeve FIS H K		**12x50**		**12x85**		**16x85**				**16x130**		**20x85**				**20x130**	
$V_{Rk} = V_{Rk,b} = V_{Rk,c}$ [kN] depending on the compressive strength f_b (temperature range 50/80°C and 72/120°C)																	
compressive strength f_b	use category																
2 N/mm²	w/w, w/d, d/d	0,3		0,6		0,3		0,6		0,6		0,9				0,75	
4 N/mm²	w/w, w/d, d/d	0,75		1,2		0,75		1,2		1,2		2,0				1,5	
6 N/mm²	w/w, w/d, d/d	0,9		2,0		0,9		2,0		1,5		3,0				2,0	
8 N/mm²	w/w, w/d, d/d	1,5		2,5		1,5		2,5		2,0		4,0				3,0	

Table C59.2: Characteristic resistance under shear load (Push through anchorage)

Anchor rod		**M10**	**M12**	**M16**
Perforated sleeve FIS H K		**18x130/200**		**22x130/200**
$V_{Rk} = V_{Rk,b} = V_{Rk,c}$ [kN] depending on the compressive strength f_b (temperature range 50/80°C and 72/120°C)				
compressive strength f_b	use category			
2 N/mm²	w/w, w/d, d/d	0,6		0,75
4 N/mm²	w/w, w/d, d/d	1,2		1,5
6 N/mm²	w/w, w/d, d/d	1,5		2,0
8 N/mm²	w/w, w/d, d/d	2,0		3,0

Factor for job site tests and displacements see annex C110

fischer injection system FIS V Plus for masonry

Performance
Vertical perforated brick HLz, Characteristic resistance under shear load

Annex C 59

Electronic copy of the ETA by DIBt: ETA-20/0729

Vertical perforated brick HLz, EN 771-1:2015

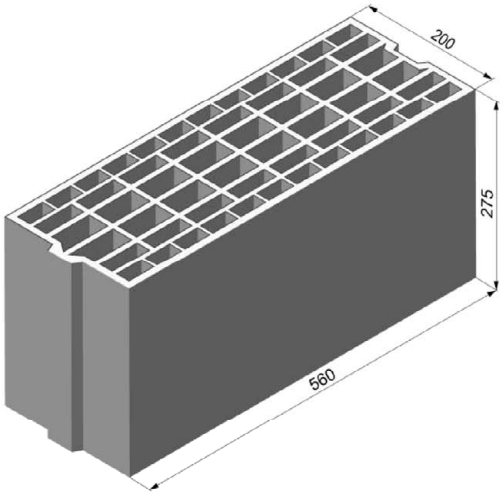

Vertical perforated brick HLz, EN 771-1:2015			
Producer	e.g. Imery		
Nominal dimensions [mm]	length L	width W	height H
	560	200	275
Density ρ [kg/dm³]	≥ 0,7		
Compressive strength f_b [N/mm²]	4 / 6 / 8		
Standard or annex	EN 771-1:2015		

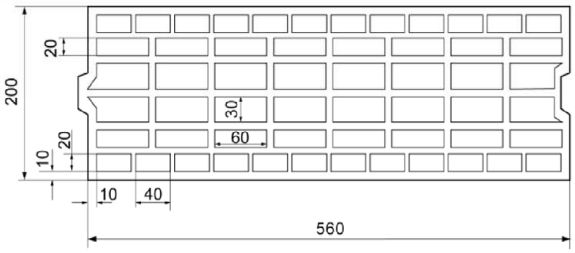

Dimension see also Annex B 17

Table C60.1: Installation parameters

Anchor rod			M8	M10	M10	M12	M12	M16	M16
Perforated sleeve FIS H K			16x130		18x130/200		20x130		22x130/200
Anchor rod with perforated sleeve FIS H K									
Max. installation torque	T_{inst}	[Nm]	2						
General installation parameters									
Edge distance	c_{min}	[mm]	80						
Spacing	s_{min} ∥ = s_{cr} ∥	[mm]	560						
	s_{min} ⊥ = s_{cr} ⊥	[mm]	275						
Drilling method									
Hammer drilling with hard metal hammer drill									

Table C60.2: Group factors

Anchor rod			M8	M10	M10	M12	M12	M16	M16
Perforated sleeve FIS H K			16x130		18x130/200		20x130		22x130/200
Group factors	$\alpha_{g,N}$ ∥	[-]	2						
	$\alpha_{g,V}$ ∥	[-]	2						
	$\alpha_{g,N}$ ⊥	[-]	2						
	$\alpha_{g,V}$ ⊥	[-]	2						

fischer injection system FIS V Plus for masonry

Performance
Vertical perforated brick HLz, dimensions, installation parameters

Annex C 60

Electronic copy of the ETA by DIBt: ETA-20/0729

Vertical perforated brick HLz, EN 771-1:2015

Table C61.1: Characteristic resistance under tension load

Anchor rod			**M8**	**M10**	**M10**	**M12**	**M12**	**M16**	**M16**
Perforated sleeve FIS H K			**16x130**		**18x130/200**		**20x130**		**22x130/200**
$N_{Rk} = N_{Rk,p} = N_{Rk,b}$ [kN] depending on the compressive strength f_b (temperature range 50/80°C)									
compressive strength f_b	use category								
4 N/mm²	w/w	w/d	0,9				1,2		
	d/d		1,2				1,5		
6 N/mm²	w/w	w/d	1,5				2,0		
	d/d		1,5				2,0		
8 N/mm²	w/w	w/d	2,0				2,5		
	d/d		2,5				3,0		

Factor for temperature range 72/120°C: 0,83

Table C61.2: Characteristic resistance under shear load

Anchor rod			**M8**	**M10**	**M10**	**M12**	**M12**	**M16**	**M16**
Perforated sleeve FIS H K			**16x130**		**18x130/200**		**20x130**		**22x130/200**
$V_{Rk} = V_{Rk,b} = V_{Rk,c}$ [kN] depending on the compressive strength f_b (temperature range 50/80°C and 72/120°C)									
compressive strength f_b	use category								
4 N/mm²	w/w	w/d	0,9						
	d/d								
6 N/mm²	w/w	w/d	1,5						
	d/d								
8 N/mm²	w/w	w/d	2,0						
	d/d								

Factor for job site tests and displacements see annex C110

Electronic copy of the ETA by DIBt: ETA-20/0729

Vertical perforated brick HLz, EN 771-1:2015

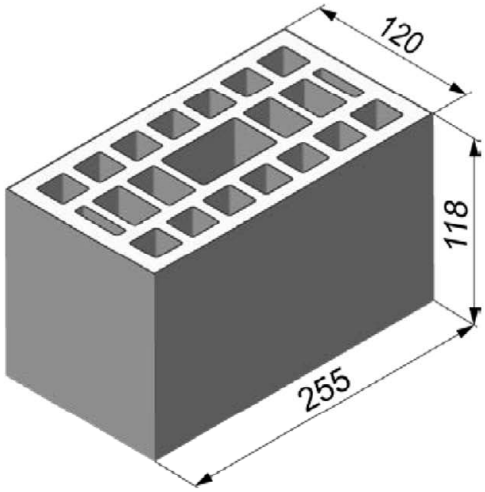

Vertical perforated brick HLz, EN 771-1:2015			
Producer	e.g. Wienerberger		
Nominal dimensions [mm]	length L	width W	height H
	255	120	118
Density ρ [kg/dm³]	≥ 1,0		
Compressive strength f_b [N/mm²]	2 / 4 / 6 / 8 / 10 / 12		
Standard or annex	EN 771-1:2015		

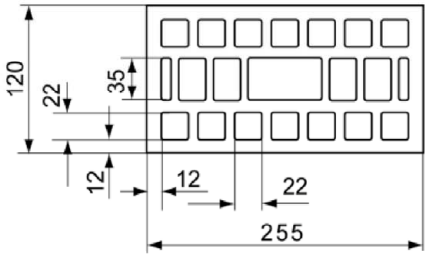

Dimension see also Annex B 18

Table C62.1: Installation parameters

Anchor rod		M6	M8	M6	M8	-		M8	M10	-		M12	M16
Internal threaded anchor FIS E		-		-		M6	M8	-		M10	M12	-	
						11x85				15x85			
Perforated sleeve FIS H K		12x50		12x85		16x85				20x85			
Anchor rod and internal threaded anchor FIS E with perforated sleeve FIS H K													
Max. installation torque	T_{inst} [Nm]	2											
General installation parameters													
Edge distance	c_{min} [mm]	60											
Spacing	s_{cr} ∥ = s_{min} ∥ [mm]	255											
	s_{cr} ⊥ = s_{min} ⊥ [mm]	120											
Drilling method													
Hammer drilling with hard metal hammer drill													

Table C62.2: Group factors

Anchor rod		M6	M8	M6	M8	-		M8	M10	-		M12	M16
Internal threaded anchor FIS E		-		-		M6	M8	-		M10	M12	-	
						11x85				15x85			
Perforated sleeve FIS H K		12x50		12x85		16x85				20x85			
Group factors	$\alpha_{g,N}$ ∥	2											
	$\alpha_{g,V}$ ∥												
	$\alpha_{g,N}$ ⊥												
	$\alpha_{g,V}$ ⊥ [-]												

fischer injection system FIS V Plus for masonry

Performance
Vertical perforated brick HLz, dimensions, installation parameters

Annex C 62

Electronic copy of the ETA by DIBt: ETA-20/0729

Vertical perforated brick HLz, EN 771-1:2015

Table C63.1: Characteristic resistance under tension load

Anchor rod		**M6**	**M8**	**M6**	**M8**	**-**		**M8**	**M10**	**-**		**M12**	**M16**
Internal threaded anchor FIS E		**-**		**-**		**M6**	**M8**	**-**		**M10**	**M12**	**-**	
						11x85				**15x85**			
Perforated sleeve FIS H K		**12x50**		**12x85**		**16x85**				**20x85**			
$N_{Rk} = N_{Rk,p} = N_{Rk,b}$ [kN] depending on the compressive strength f_b (temperature range 50/80°C)													
compressive strength **f_b**	use category												
2 N/mm²	w/w	w/d		0,4		0,5				-[1]			
	d/d			0,5		0,5				-[1]			
4 N/mm²	w/w	w/d		0,9		0,9				0,5			
	d/d			0,9		1,2				0,5			
6 N/mm²	w/w	w/d		1,2		1,5				0,75			
	d/d			1,5		1,5				0,75			
8 N/mm²	w/w	w/d		1,5		2,0				0,9			
	d/d			2,0		2,0				0,9			
10 N/mm²	w/w	w/d		2,0		2,5				1,2			
	d/d			2,5		2,5				1,2			
12 N/mm²	w/w	w/d		2,5		3,0				1,5			
	d/d			3,0		3,5				1,5			

[1] No performance assesses

Factor for job site tests and displacements see annex C110

Factor for temperature range 72/120°C: 0,83

Electronic copy of the ETA by DIBt: ETA-20/0729

Vertical perforated brick HLz, EN 771-1:2015

Table C64.1: Characteristic resistance under shear load

Anchor rod		**M6**	**M8**	**M6**	**M8**	**-**	**M8**	**M10**	**-**	**M12**	**M16**
Internal threaded anchor FIS E		**-**		**-**		**M6 / M8** 11x85	**-**		**M10 / M12** 15x85	**-**	
Perforated sleeve FIS H K		**12x50**		**12x85**		**16x85**			**20x85**		
$V_{Rk} = V_{Rk,b} = V_{Rk,c}$ [kN] depending on the compressive strength f_b (temperature range 50/80°C and 72/120°C)											
compressivestrength f_b	use category										
2 N/mm²	w/w, w/d, d/d	0,6	0,75	0,6	0,75	0,9					
4 N/mm²	w/w, w/d, d/d	1,2	1,5	1,2	1,5	2,0					
6 N/mm²	w/w, w/d, d/d	2,0	2,0	2,0	2,0	2,5					
8 N/mm²	w/w, w/d, d/d	2,5	3,0	2,5	3,0	3,5					
10 N/mm²	w/w, w/d, d/d	3,0	3,5	3,0	3,5	4,5					
12 N/mm²	w/w, w/d, d/d	4,0	4,5	4,0	4,5	5,5					

Factor for job site tests and displacements see annex C110

Electronic copy of the ETA by DIBt: ETA-20/0729

Vertical perforated brick HLz, EN 771-1:2015

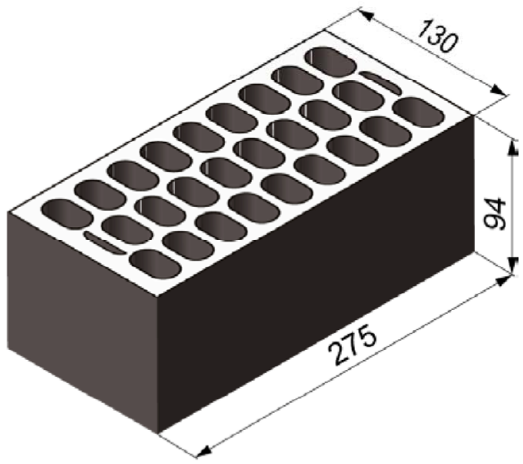

Vertical perforated brick HLz, EN 771-1:2015			
Producer	e.g. Cermanica Farreny S.A.		
Nominal dimensions [mm]	length L	width W	height H
	275	130	94
Density ρ [kg/dm³]	≥ 0,8		
Compressive strength f_b [N/mm²]	6 / 8 / 12 / 16 / 20		
Standard or annex	EN 771-1:2015		

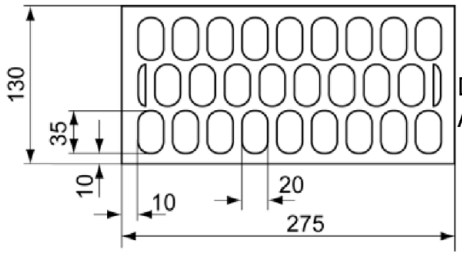

Dimension see also Annex B 18

Table C65.1: Installation parameters

Anchor rod		**M6**	**M8**	**M6**	**M8**	**-**		**M8**	**M10**	**-**		**M12**	**M16**
Internal threaded anchor FIS E		**-**		**-**		**M6**	**M8**	**-**		**M10**	**M12**	**-**	
						11x85				**15x85**			
Perforated sleeve FIS H K		**12x50**		**12x85**		**16x85**				**20x85**			
Anchor rod and internal threaded anchor FIS E with perforated sleeve FIS H K													
Max. installation torque T_{inst}	[Nm]	2											
General installation parameters													
Edge distance c_{min}	[mm]	100								120			
Spacing s_{cr} ∥ = s_{min} ∥	[mm]	275											
Spacing s_{cr} ⊥ = s_{min} ⊥	[mm]	95											
Drilling method													
Hammer drilling with hard metal hammer drill													

Table C65.2: Group factors

Anchor rod		**M6**	**M8**	**M6**	**M8**	**-**		**M8**	**M10**	**-**		**M12**	**M16**
Internal threaded anchor FIS E		**-**		**-**		**M6**	**M8**	**-**		**M10**	**M12**	**-**	
						11x85				**15x85**			
Perforated sleeve FIS H K		**12x50**		**12x85**		**16x85**				**20x85**			
Group factors $\alpha_{g,N}$ ∥	[-]	2											
Group factors $\alpha_{g,V}$ ∥	[-]	2											
Group factors $\alpha_{g,N}$ ⊥	[-]	2											
Group factors $\alpha_{g,V}$ ⊥	[-]	2											

fischer injection system FIS V Plus for masonry

Performance
Vertical perforated brick HLz, dimensions, installation parameters

Annex C 65

Electronic copy of the ETA by DIBt: ETA-20/0729

Vertical perforated brick HLz, EN 771-1:2015

Table C66.1: Characteristic resistance under tension load

Anchor rod	**M6**	**M8**	**M6**	**M8**	**-**	**M8**	**M10**	**-**	**M12**	**M16**
Internal threaded anchor FIS E	**-**		**-**		**M6** / **M8**	**-**		**M10** / **M12**	**-**	
					11x85			**15x85**		
Perforated sleeve FIS H K	**12x50**		**12x85**		**16x85**			**20x85**		

$N_{Rk} = N_{Rk,p} = N_{Rk,b}$ [kN] depending on the compressive strength f_b (temperature range 50/80°C)

compressive strength f_b	use category			
6 N/mm²	w/w	w/d	0,4	0,9
	d/d		0,4	0,9
8 N/mm²	w/w	w/d	0,5	1,2
	d/d		0,6	1,2
12 N/mm²	w/w	w/d	0,75	1,5
	d/d		0,9	2,0
16 N/mm²	w/w	w/d	0,9	2,0
	d/d		1,2	2,5
20 N/mm²	w/w	w/d	1,2	3,0
	d/d		1,5	3,0

Factor for temperature range 72/120°C: 0,83

Table C66.2: Characteristic resistance under shear load

Anchor rod	**M6**	**M8**	**M6**	**M8**	**-**	**M8**	**M10**	**-**	**M12**	**M16**
Internal threaded anchor FIS E	**-**		**-**		**M6** / **M8**	**-**		**M10** / **M12**	**-**	
					11x85			**15x85**		
Perforated sleeve FIS H K	**12x50**		**12x85**		**16x85**			**20x85**		

$V_{Rk} = V_{Rk,b} = V_{Rk,c}$ [kN] depending on the compressive strength f_b (temperature range 50/80°C and 72/120°C)

compressive strength f_b	use category			
6 N/mm²	w/w	w/d	1,2	1,2
	d/d			
8 N/mm²	w/w	w/d	1,5	1,5
	d/d			
12 N/mm²	w/w	w/d	2,0	2,5
	d/d			
16 N/mm²	w/w	w/d	3,0	3,0
	d/d			
20 N/mm²	w/w	w/d	4,0	4,0
	d/d			

Factor for job site tests and displacements see annex C110

fischer injection system FIS V Plus for masonry

Performance
Vertical perforated brick HLz, Characteristic resistance under tension and shear load

Annex C 66

Electronic copy of the ETA by DIBt: ETA-20/0729

Vertical perforated brick HLz, EN 771-1:2015

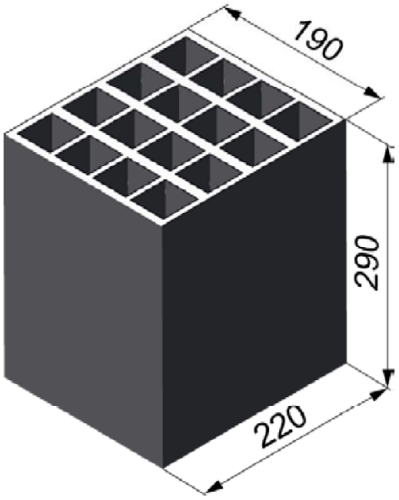

Vertical perforated brick HLz, EN 771-1:2015			
Producer	e.g. Perceram		
Nominal dimensions [mm]	length L	width W	height H
	220	190	290
Density ρ [kg/dm³]	≥ 0,7		
Compressive strength f_b [N/mm²]	6 / 8 / 10		
Standard or annex	EN 771-1:2015		

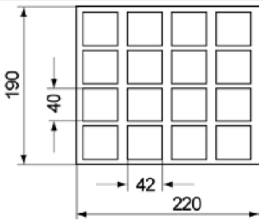

Dimension see also Annex B 18

Table C67.1: Installation parameters
(Pre-positioned anchorage with perforated sleeve FIS H K)

Anchor rod	**M6**	**M8**	**M6**	**M8**	**-**		**M8**	**M10**	**M8**	**M10**	**-**		**M12**	**M16**	**M12**	**M16**
Internal threaded anchor FIS E	**-**		**-**		**M6**	**M8**	**-**		**-**		**M10**	**M12**	**-**		**-**	
					11x85						**15x85**					
Perforated sleeve FIS H K	**12x50**		**12x85**		**16x85**				**16x130**		**20x85**				**20x130**	

Anchor rod and internal threaded anchor FIS E with perforated sleeve FIS H K			
Max. installation torque	T_{inst}	[Nm]	2
General installation parameters			
Edge distance	c_{min}	[mm]	110
Spacing	s_{min} ∥ = s_{cr} ∥	[mm]	220
	s_{min} ⊥ = s_{cr} ⊥	[mm]	290
Drilling method			
Hammer drilling with hard metal hammer drill			

Table C67.2: Group factors

Anchor rod	**M6**	**M8**	**M6**	**M8**	**-**		**M8**	**M10**	**M8**	**M10**	**-**		**M12**	**M16**	**M12**	**M16**
Internal threaded anchor FIS E	**-**		**-**		**M6**	**M8**	**-**		**-**		**M10**	**M12**	**-**		**-**	
					11x85						**15x85**					
Perforated sleeve FIS H K	**12x50**		**12x85**		**16x85**				**16x130**		**20x85**				**20x130**	

Group factors	$\alpha_{g,N}$ ∥	[-]	2
	$\alpha_{g,V}$ ∥		
	$\alpha_{g,N}$ ⊥		
	$\alpha_{g,V}$ ⊥		

fischer injection system FIS V Plus for masonry

Performance
Vertical perforated brick HLz, dimensions, installation parameters

Annex C 67

Electronic copy of the ETA by DIBt: ETA-20/0729

Vertical perforated brick HLz, EN 771-1:2015

Table C68.1: Installation parameters
(Push through anchorage with perforated sleeve FIS H K)

Anchor rod			**M10**	**M12**	**M16**
Perforated sleeve FIS H K			**18x130/200**		**22x130/200**
Anchor rod with perforated sleeve FIS H K					
Max. installation torque	T_{inst}	[Nm]	2		
General installation parameters					
Edge distance	c_{min}	[mm]	110		
Spacing	s_{min} II = s_{cr} II	[mm]	220		
	s_{min} ⊥ = s_{cr} ⊥	[mm]	290		
Drilling method					
Hammer drilling with hard metal hammer drill					

Table C68.2: Group factors

Anchor rod			**M10**	**M12**	**M16**
Perforated sleeve FIS H K			**18x130/200**		**22x130/200**
Group factors	$\alpha_{g,N}$ II	[-]	2		
	$\alpha_{g,V}$ II	[-]	2		
	$\alpha_{g,N}$ ⊥	[-]	2		
	$\alpha_{g,V}$ ⊥	[-]	2		

Electronic copy of the ETA by DIBt: ETA-20/0729

Vertical perforated brick HLz, EN 771-1:2015

Table C69.1: Characteristic resistance under tension load (Pre-positioned anchorage)

Anchor rod			**M6**	**M8**	**M6**	**M8**	**-**	**M8**	**M10**	**M8**	**M10**	**-**	**M12**	**M16**	**M12**	**M16**
Internal threaded anchor FIS E			**-**		**-**		**M6** / **11x85**	**M8**		**-**		**-**	**M10** / **15x85**	**M12**	**-**		**-**
Perforated sleeve FIS H K			**12x50**		**12x85**		**16x85**			**16x130**		**20x85**			**20x130**	
$N_{Rk} = N_{Rk,p} = N_{Rk,b}$ [kN] depending on the compressive strength f_b (temperature range 50/80°C)																
compressive strength f_b	use category															
6 N/mm²	w/w	w/d	0,3		1,2		1,2			1,5		1,2			1,5	
	d/d		0,4		1,5		1,5			1,5		1,5			1,5	
8 N/mm²	w/w	w/d	0,5		1,5		1,5			2,0		1,5			2,0	
	d/d		0,5		2,0		2,0			2,5		2,0			2,5	
10 N/mm²	w/w	w/d	0,6		2,0		2,0			2,5		2,0			2,5	
	d/d		0,6		2,5		2,5			3,0		2,5			3,0	

Table C69.2: Characteristic resistance under tension load (Push through anchorage)

Anchor rod			**M10**	**M12**	**M16**
Perforated sleeve FIS H K			**18x130/200**		**22x130/200**
$N_{Rk} = N_{Rk,p} = N_{Rk,b}$ [kN] depending on the compressive strength f_b (temperature range 50/80°C)					
compressive strength f_b	use category				
6 N/mm²	w/w	w/d	1,5		
	d/d		1,5		
8 N/mm²	w/w	w/d	2,0		
	d/d		2,5		
10 N/mm²	w/w	w/d	2,5		
	d/d		3,0		

Factor for job site tests and displacements see annex C110

Factor for temperature range 72/120°C: 0,83

Electronic copy of the ETA by DIBt: ETA-20/0729

Vertical perforated brick HLz, EN 771-1:2015

Table C70.1: Characteristic resistance under shear load (Pre-positioned anchorage)

Anchor rod		**M6**	**M8**	**M6**	**M8**	**-**	**M8**	**M10**	**M8**	**M10**	**-**	**M12**	**M16**	**M12**	**M16**
Internal threaded anchor FIS E		**-**		**-**		**M6** / **11x85**	**M8**		**-**		**-**	**M10** / **15x85**	**M12**	**-**		**-**
Perforated sleeve FIS H K		**12x50**		**12x85**		**16x85**			**16x130**		**20x85**			**20x130**	
$V_{Rk} = V_{Rk,b} = V_{Rk,c}$ [kN] depending on the compressive strength f_b (temperature range 50/80°C and 72/120°C)															
compressive strength f_b	use category														
6 N/mm²	w/w, w/d, d/d	1,5		1,5		1,5			2,5		1,5			2,0	
8 N/mm²	w/w, w/d, d/d	2,0		2,0		2,0			3,5		2,0			3,0	
10 N/mm²	w/w, w/d, d/d	2,5		3,0		3,0			4,5		3,0			3,5	

Table C70.2: Characteristic resistance under shear load (Push through anchorage)

Anchor rod		**M10**	**M12**	**M16**
Perforated sleeve FIS H K		**18x130/200**		**22x130/200**
$V_{Rk} = V_{Rk,b} = V_{Rk,c}$ [kN] depending on the compressive strength f_b (temperature range 50/80°C and 72/120°C)				
compressive strength f_b	use category			
6 N/mm²	w/w, w/d, d/d	2,0		
8 N/mm²	w/w, w/d, d/d	3,0		
10 N/mm²	w/w, w/d, d/d	3,5		

Factor for job site tests and displacements see annex C110

Electronic copy of the ETA by DIBt: ETA-20/0729

Vertical perforated brick HLz, EN 771-1:2015

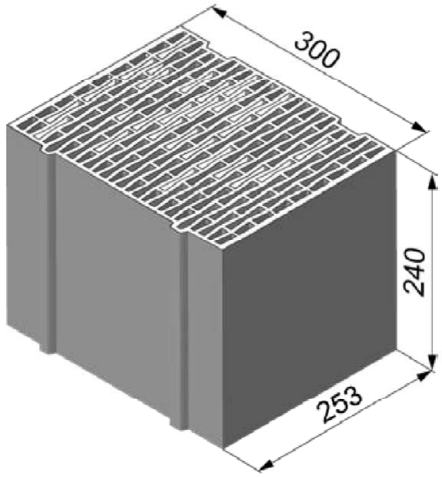

Vertical perforated brick HLz, EN 771-1:2015			
Producer	e.g. Ziegelwerk Brenna		
Nominal dimensions [mm]	length L	width W	height H
	253	300	240
Density ρ [kg/dm³]	≥ 0,8		
Compressive strength f_b [N/mm²]	2 / 4 / 6		
Standard or annex	EN 771-1:2015		

Dimension see also Annex B 18

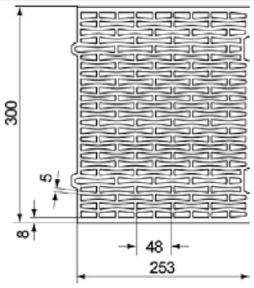

Table C71.1: Installation parameters
(Pre-positioned anchorage with perforated sleeve FIS H K)

Anchor rod	**M6**	**M8**	**M6**	**M8**	**-**		**M8**	**M10**	**M8**	**M10**	**-**		**M12**	**M16**	**M12**	**M16**
Internal threaded anchor FIS E	**-**		**-**		**M6**	**M8**	**-**		**-**		**M10**	**M12**	**-**		**-**	
					11x85						**15x85**					
Perforated sleeve FIS H K	**12x50**		**12x85**		**16x85**				**16x130**		**20x85**				**20x130**	

Anchor rod and internal threaded anchor FIS E with perforated sleeve FIS H K			
Max. installation torque	T_{inst}	[Nm]	2
General installation parameters			
Edge distance	c_{min}	[mm]	60
Spacing	s_{min} ∥ = s_{cr} ∥	[mm]	255
	s_{min} ⊥ = s_{cr} ⊥	[mm]	240
Drilling method			
Hammer drilling with hard metal hammer drill			

Table C71.2: Group factors

Anchor rod	**M6**	**M8**	**M6**	**M8**	**-**		**M8**	**M10**	**M8**	**M10**	**-**		**M12**	**M16**	**M12**	**M16**
Internal threaded anchor FIS E	**-**		**-**		**M6**	**M8**	**-**		**-**		**M10**	**M12**	**-**		**-**	
					11x85						**15x85**					
Perforated sleeve FIS H K	**12x50**		**12x85**		**16x85**				**16x130**		**20x85**				**20x130**	

Group factors	$\alpha_{g,N}$ ∥	[-]	2
	$\alpha_{g,V}$ ∥		
	$\alpha_{g,N}$ ⊥		
	$\alpha_{g,V}$ ⊥		

fischer injection system FIS V Plus for masonry

Performance
Vertical perforated brick HLz, dimensions, installation parameters

Annex C 71

Electronic copy of the ETA by DIBt: ETA-20/0729

Vertical perforated brick HLz, EN 771-1:2015

Table C72.1: Installation parameters
(Push through anchorage with perforated sleeve FIS H K)

Anchor rod			**M10**	**M12**	**M16**
Perforated sleeve FIS H K			**18x130/200**		**22x130/200**
Anchor rod with perforated sleeve FIS H K					
Max. installation torque	T_{inst}	[Nm]	2		
General installation parameters					
Edge distance	c_{min}	[mm]	60		
Spacing	s_{min} ∥ = s_{cr} ∥	[mm]	255		
	s_{min} ⊥ = s_{cr} ⊥	[mm]	240		
Drilling method					
Hammer drilling with hard metal hammer drill					

Table C72.2: Group factors

Anchor rod			**M10**	**M12**	**M16**
Perforated sleeve FIS H K			**18x130/200**		**22x130/200**
Group factors	$\alpha_{g,N}$ ∥	[-]	2		
	$\alpha_{g,V}$ ∥	[-]	2		
	$\alpha_{g,N}$ ⊥	[-]	2		
	$\alpha_{g,V}$ ⊥	[-]	2		

fischer injection system FIS V Plus for masonry

Performance
Vertical perforated brick HLz, dimensions, installation parameters

Annex C 72

Electronic copy of the ETA by DIBt: ETA-20/0729

Vertical perforated brick HLz, EN 771-1:2015

Table C73.1: Characteristic resistance under tension load (Pre-positioned anchorage)

Anchor rod			**M6**	**M8**	**M6**	**M8**	**-**	**M8**	**M10**	**M8**	**M10**	**-**	**M12**	**M16**	**M12**	**M16**
Internal threaded anchor FIS E			**-**		**-**		**M6** / **11x85**	**M8**		**-**		**-**	**M10** / **15x85**	**M12**	**-**		**-**
Perforated sleeve FIS H K			**12x50**		**12x85**		**16x85**			**16x130**		**20x85**			**20x130**	
$N_{Rk} = N_{Rk,p} = N_{Rk,b}$ [kN] depending on the compressive strength f_b (temperature range 50/80°C)																
compressive strength f_b	use category															
2 N/mm²	w/w	w/d	-[1]		0,5		0,5			0,4		0,5			0,4	
	d/d		0,3		0,5		0,5			0,5		0,5			0,5	
4 N/mm²	w/w	w/d	0,5		0,9		0,9			0,9		0,9			0,9	
	d/d		0,6		0,9		0,9			0,9		0,9			0,9	
6 N/mm²	w/w	w/d	0,75		1,5		1,5			1,2		1,5			1,2	
	d/d		0,9		1,5		1,5			1,5		1,5			1,5	

[1] No performance assessed

Table C73.2: Characteristic resistance under tension load (Push through anchorage)

Anchor rod			**M10**	**M12**	**M16**
Perforated sleeve FIS H K			**18x130/200**		**22x130/200**
$N_{Rk} = N_{Rk,p} = N_{Rk,b}$ [kN] depending on the compressive strength f_b (temperature range 50/80°C)					
compressive strength f_b	use category				
2 N/mm²	w/w	w/d	0,4		
	d/d		0,5		
4 N/mm²	w/w	w/d	0,9		
	d/d		0,9		
6 N/mm²	w/w	w/d	1,2		
	d/d		1,5		

Factor for job site tests and displacements see annex C110

Factor for temperature range 72/120°C: 0,83

Electronic copy of the ETA by DIBt: ETA-20/0729

Vertical perforated brick HLz, EN 771-1:2015

Table C74.1: Characteristic resistance under shear load (Pre-positioned anchorage)

Anchor rod	**M6**	**M8**	**M6**	**M8**	**-**	**M8**	**M10**	**M8**	**M10**	**-**	**M12**	**M16**	**M12**	**M16**
Internal threaded anchor FIS E	**-**		**-**		**M6 / M8** 11x85	**-**		**-**		**M10 / M12** 15x85	**-**		**-**	
Perforated sleeve FIS H K	**12x50**		**12x85**		**16x85**			**16x130**		**20x85**			**20x130**	
$V_{Rk} = V_{Rk,b} = V_{Rk,c}$ [kN] depending on the compressive strength f_b (temperature range 50/80°C and 72/120°C)														
compressive strength f_b	use category													
2 N/mm²	w/w	w/d			0,5						0,6			
	d/d													
4 N/mm²	w/w	w/d			0,9						1,2			
	d/d													
6 N/mm²	w/w	w/d			1,5						1,5			
	d/d													

Table C74.2: Characteristic resistance under shear load (Push through anchorage)

Anchor rod	**M10**	**M12**	**M16**
Perforated sleeve FIS H K	**18x130/200**		**22x130/200**
$V_{Rk} = V_{Rk,b} = V_{Rk,c}$ [kN] depending on the compressive strength f_b (temperature range 50/80°C and 72/120°C)			
compressive strength f_b	use category		
2 N/mm²	w/w w/d d/d	0,5	0,6
4 N/mm²	w/w w/d d/d	0,9	1,2
6 N/mm²	w/w w/d d/d	1,5	1,5

Factor for job site tests and displacements see annex C110

Electronic copy of the ETA by DIBt: ETA-20/0729

Vertical perforated brick HLz, Porotherm W 44, filled with mineral wool, EN 771-1:2015

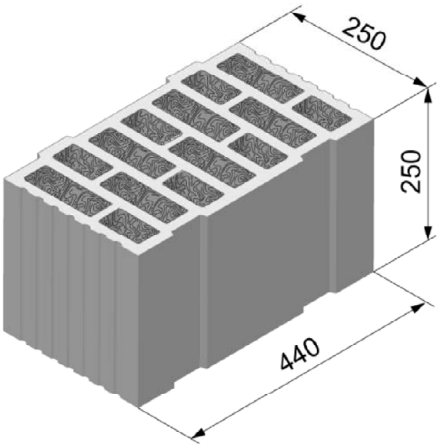

Vertical perforated brick HLz, Porotherm W 44, filled with mineral wool, EN 771-1:2015			
Producer	-		
Nominal dimensions [mm]	length L	width W	height H
	250	440	250
Density ρ [kg/dm³]	0,7		
Compressive strength f_b [N/mm²]	6 / 8 / 10		
Standard or annex	EN 771-1:2015		

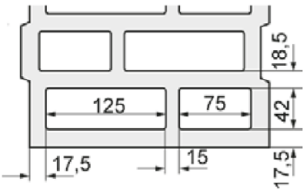

Dimension see also Annex B 18

Table C75.1: Installation parameters
(Pre-positioned anchorage with perforated sleeve FIS H K)

Anchor rod			**M6**	**M8**	**M6**	**M8**	**-**		**M8**	**M10**	**M8**	**M10**	**-**		**M12**	**M16**	**M12**	**M16**	**M12**	**M16**
Internal threaded anchor FIS E			**-**		**-**		**M6**	**M8**	**-**		**-**		**M10**	**M12**	**-**		**-**		**-**	
							11x85						**15x85**							
Perforated sleeve FIS H K			**12x50**		**12x85**		**16x85**				**16x130**		**20x85**				**20x130**		**20x200**	
Anchor rod and internal threaded anchor FIS E with perforated sleeve FIS H K																				
Max. installation torque	T_{inst}	[Nm]	2							5	2		5		6					
General installation parameters																				
Edge distance	c_{min}	[mm]	60																	
Spacing	s_{min} ∥	[mm]	80																	
	s_{cr} ∥	[mm]	250																	
	s_{min} ⊥	[mm]	80																	
	s_{cr} ⊥	[mm]	250																	
Drilling method																				
Rotary drilling with carbide drill																				

Table C75.2: Group factors

Anchor rod			**M6**	**M8**	**M6**	**M8**	**-**		**M8**	**M10**	**M8**	**M10**	**-**		**M12**	**M16**	**M12**	**M16**	**M12**	**M16**
Internal threaded anchor FIS E			**-**		**-**		**M6**	**M8**	**-**		**-**		**M10**	**M12**	**-**		**-**		**-**	
							11x85						**15x85**							
Perforated sleeve FIS H K			**12x50**		**12x85**		**16x85**				**16x130**		**20x85**				**20x130**		**20x200**	
Group factors	$\alpha_{g,N}$ ∥	[-]	1,3																	
	$\alpha_{g,V}$ ∥	[-]	1,3																	
	$\alpha_{g,N}$ ⊥	[-]	0,8																	
	$\alpha_{g,V}$ ⊥	[-]	1,3																	

fischer injection system FIS V Plus for masonry

Performance
Vertical perforated brick HLz, Porotherm W 44, filled with mineral wool; dimensions, installation parameters

Annex C 75

Electronic copy of the ETA by DIBt: ETA-20/0729

Vertical perforated brick HLz, Porotherm W 44, filled with mineral wool, EN 771-1:2015

Table C76.1: Installation parameters
(Push through anchorage with perforated sleeve FIS H K)

Anchor rod			**M10**	**M12**	**M16**
Perforated sleeve FIS H K			**18x130/200**		**22x130/200**
Anchor rod with perforated sleeve FIS H K					
Max. installation torque	T_{inst}	[Nm]	5	6	
General installation parameters					
Edge distance	c_{min}	[mm]	60		
Spacing	s_{min} ∥	[mm]	80		
	s_{cr} ∥	[mm]	250		
	s_{min} ⊥	[mm]	80		
	s_{cr} ⊥	[mm]	250		
Drilling method					
Rotary drilling with carbide drill					

Table C76.2: Group factors

Anchor rod			**M10**	**M12**	**M16**
Perforated sleeve FIS H K			**18x130/200**		**22x130/200**
Group factors	$\alpha_{g,N}$ ∥	[-]	1,3		
	$\alpha_{g,V}$ ∥	[-]	1,3		
	$\alpha_{g,N}$ ⊥	[-]	0,8		
	$\alpha_{g,V}$ ⊥	[-]	1,3		

fischer injection system FIS V Plus for masonry

Performance
Vertical perforated brick HLz, Porotherm W 44, filled with mineral wool;
dimensions, installation parameters

Annex C 76

Electronic copy of the ETA by DIBt: ETA-20/0729

Vertical perforated brick HLz, Porotherm W 44, filled with mineral wool, EN 771-1:2015

Table C77.1: Characteristic resistance under tension load (Pre-positioned anchorage)

Anchor rod			**M6**	**M8**	**M6**	**M8**	**-**	**M8**	**M10**	**M8**	**M10**	**-**	**M12**	**M16**	**M12**	**M16**	**M12**	**M16**
Internal threaded anchor FIS E			**-**		**-**		**M6 M8** / **11x85**	**-**		**-**		**M10 M12** / **15x85**	**-**		**-**		**-**	
Perforated sleeve FIS H K			**12x50**		**12x85**		**16x85**			**16x130**		**20x85**			**20x130**		**20x200**	
$N_{Rk} = N_{Rk,p} = N_{Rk,b}$ [kN] depending on the compressive strength f_b (temperature range 50/80°C)																		
compressive strength f_b	use category																	
6 N/mm²	w/w	w/d	0,75		1,5		1,2			1,5							2,5	
	d/d		0,9		1,5		1,2			1,5							2,5	
8 N/mm²	w/w	w/d	0,9		1,5		1,2			1,5							2,5	
	d/d		0,9		2,0		1,5			2,0							3,0	
10 N/mm²	w/w	w/d	0,9		2,0		1,5			2,0							3,0	
	d/d		1,2		2,0		1,5			2,0							3,5	

Table C77.2: Characteristic resistance under tension load (Push through anchorage)

Anchor rod			**M10**	**M12**	**M16**
Perforated sleeve FIS H K			**18x130/200**		**22x130/200**
$N_{Rk} = N_{Rk,p} = N_{Rk,b}$ [kN] depending on the compressive strength f_b (temperature range 50/80°C)					
compressive strength f_b	use category				
6 N/mm²	w/w	w/d	1,5		
	d/d		1,5		
8 N/mm²	w/w	w/d	1,5		
	d/d		2,0		
10 N/mm²	w/w	w/d	2,0		
	d/d		2,0		

Factor for job site tests and displacements see annex C110

Factor for temperature range 72/120°C: 0,83

Electronic copy of the ETA by DIBt: ETA-20/0729

Vertical perforated brick HLz, Porotherm W 44, filled with mineral wool, EN 771-1:2015

Table C78.1: Characteristic resistance under shear load (Pre-positioned anchorage)

Anchor rod	**M6**	**M8**	**M6**	**M8**	**-**	**M8**	**M10**	**M8**	**M10**	**-**	**M12**	**M16**	**M12**	**M16**	**M12**	**M16**
Internal threaded anchor FIS E	**-**		**-**		**M6 M8** / **11x85**	**-**		**-**		**M10 M12** / **15x85**	**-**		**-**		**-**	
Perforated sleeve FIS H K	**12x50**		**12x85**		**16x85**			**16x130**		**20x85**			**20x130**		**20x200**	
$V_{Rk} = V_{Rk,b} = V_{Rk,c}$ [kN] depending on the compressive strength f_b (temperature range 50/80°C and 72/120°C)																
compressive strength f_b	use category															
6 N/mm²	w/w	w/d			0,9			1,2		0,9			1,2		1,2	
	d/d															
8 N/mm²	w/w	w/d			0,9			1,5		0,9			1,5		1,2	
	d/d															
10 N/mm²	w/w	w/d			1,2			1,5		1,2			1,5		1,5	
	d/d															

Table C78.2: Characteristic resistance under shear load (Push through anchorage)

Anchor rod	**M10**	**M12**	**M16**
Perforated sleeve FIS H K	**18x130/200**		**22x130/200**
$V_{Rk} = V_{Rk,b} = V_{Rk,c}$ [kN] depending on the compressive strength f_b (temperature range 50/80°C and 72/120°C)			
compressive strength f_b / use category			
6 N/mm² w/w w/d d/d	1,2		1,2
8 N/mm² w/w w/d d/d	1,5		1,5
10 N/mm² w/w w/d d/d	1,5		1,5

Factor for job site tests and displacements see annex C110

Electronic copy of the ETA by DIBt: ETA-20/0729

Vertical perforated brick HLz, EN 771-1:2015

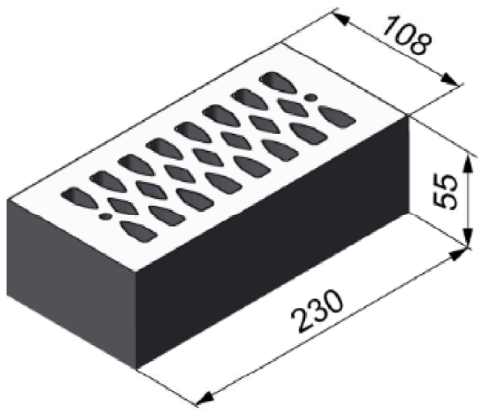

Vertical perforated brick HLz, EN 771-1:2015			
Producer	e.g. Wienerberger.		
Nominal dimensions [mm]	length L	width W	height H
	230	108	55
Density ρ [kg/dm³]	≥ 1,4		
Compressive strength f_b [N/mm²]	2 / 4 / 6 / 8		
Standard or annex	EN 771-1:2015		

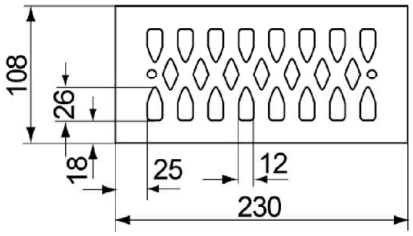

Dimension see also Annex B 18

Table C79.1: Installation parameters

Anchor rod			**M6**	**M8**	**M6**	**M8**	**-**		**M8**	**M10**	**-**		**M12**	**M16**
Internal threaded anchor FIS E			**-**		**-**		**M6**	**M8**	**-**		**M10**	**M12**	**-**	
							11x85				**15x85**			
Perforated sleeve FIS H K			**12x50**		**12x85**		**16x85**				**20x85**			
Anchor rod and internal threaded anchor FIS E with perforated sleeve FIS H K														
Max. installation torque	T_{inst}	[Nm]	2											
General installation parameters														
Edge distance	c_{min}	[mm]	60											
Spacing	s_{min} ∥	[mm]	80											
	s_{cr} ∥	[mm]	230											
	s_{min} ⊥	[mm]	60											
	s_{cr} ⊥	[mm]	60											
Drilling method														
Hammer drilling with hard metal hammer drill														

Table C79.2: Group factors

Anchor rod			**M6**	**M8**	**M6**	**M8**	**-**		**M8**	**M10**	**-**		**M12**	**M16**
Internal threaded anchor FIS E			**-**		**-**		**M6**	**M8**	**-**		**M10**	**M12**	**-**	
							11x85				**15x85**			
Perforated sleeve FIS H K			**12x50**		**12x85**		**16x85**				**20x85**			
Group factors	$\alpha_{g,N}$ ∥	[-]	2											
	$\alpha_{g,V}$ ∥	[-]	2											
	$\alpha_{g,N}$ ⊥	[-]	2											
	$\alpha_{g,V}$ ⊥	[-]	2											

fischer injection system FIS V Plus for masonry

Performance
Vertical perforated brick HLz, dimensions, installation parameters

Annex C 79

Electronic copy of the ETA by DIBt: ETA-20/0729

Vertical perforated brick HLz, EN 771-1:2015

Table C80.1: Characteristic resistance under tension load [1)]

Anchor rod			**M6**	**M8**	**M6**	**M8**	**-**	**M8**	**M10**	**-**	**M12**	**M16**
Internal threaded anchor FIS E			**-**		**-**		**M6** / **M8**	**-**		**M10** / **M12**	**-**	
							11x85			**15x85**		
Perforated sleeve FIS H K			**12x50**		**12x85**		**16x85**			**20x85**		
$N_{Rk} = N_{Rk,p} = N_{Rk,b}$ [kN] depending on the compressive strength f_b (temperature range 50/80°C)												
compressive strength f_b	use category											
2 N/mm²	w/w	w/d	0,3		0,9		0,75			0,5		
	d/d		0,3		0,9		0,9			0,6		
4 N/mm²	w/w	w/d	0,6		1,5		1,5			0,9		
	d/d		0,75		2,0		1,5			1,2		
6 N/mm²	w/w	w/d	0,9		2,5		2,5			1,5		
	d/d		0,9		3,0		2,5			1,5		
8 N/mm²	w/w	w/d	1,2		3,5		3,0			2,0		
	d/d		1,5		4,0		3,5			2,5		

[1)] If the fixing is in a solid area, for w/w, the characteristic value shall be reduced with the factor 0,64.

Factor for temperature range 72/120°C: 0,83

Table C80.2: Characteristic resistance under shear load

Anchor rod			**M6**	**M8**	**M6**	**M8**	**-**	**M8**	**M10**	**-**	**M12**	**M16**
Internal threaded anchor FIS E			**-**		**-**		**M6** / **M8**	**-**		**M10** / **M12**	**-**	
							11x85			**15x85**		
Perforated sleeve FIS H K			**12x50**		**12x85**		**16x85**			**20x85**		
$V_{Rk} = V_{Rk,b} = V_{Rk,c}$ [kN] depending on the compressive strength f_b (temperature range 50/80°C and 72/120°C)												
compressive strength f_b	use category											
2 N/mm²	w/w	w/d	0,6							0,4		
	d/d											
4 N/mm²	w/w	w/d	1,2							0,9		
	d/d											
6 N/mm²	w/w	w/d	1,5							1,2		
	d/d											
8 N/mm²	w/w	w/d	2,5							1,5		
	d/d											

Factor for job site tests and displacements see annex C110

fischer injection system FIS V Plus for masonry	**Annex C 80**
Performance Vertical perforated brick HLz, Characteristic resistance under tension and shear load	

Electronic copy of the ETA by DIBt: ETA-20/0729

Horizontal perforated brick LLz, EN 771-1:2015

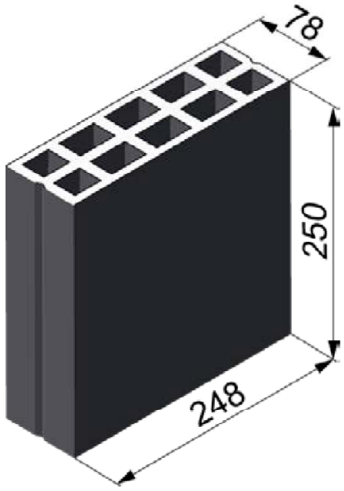

Horizontal perforated brick LLz, EN 771-1:2015			
Producer	-		
Nominal dimensions [mm]	length L	width W	height H
	250	78	248
Density ρ [kg/dm³]	≥ 0,7		
Compressive strength f_b [N/mm²]	2 / 4 / 6		
Standard or annex	EN 771-1:2015		

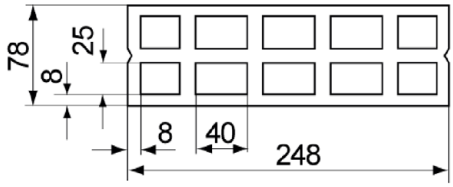

Dimension see also Annex B 19

Table C81.1: Installation parameters

Anchor rod			**M6**	**M8**
Perforated sleeve FIS H K			**12x50**	
Anchor rod with perforated sleeve FIS H K				
Max. installation torque	T_{inst}	[Nm]	2	
General installation parameters				
Edge distance	c_{min}	[mm]	100	
Spacing	s_{min} ∥	[mm]	75	
	s_{cr} ∥	[mm]	250	
	s_{min} ⊥ = s_{cr} ⊥	[mm]	250	
Drilling method				
Hammer drilling with hard metal hammer drill				

Table C81.2: Group factors

Anchor rod			**M6**	**M8**
Perforated sleeve FIS H K			**12x50**	
Group factors	$\alpha_{g,N}$ ∥	[-]	1,6	
	$\alpha_{g,V}$ ∥	[-]	1,1	
	$\alpha_{g,N}$ ⊥	[-]	2,0	
	$\alpha_{g,V}$ ⊥	[-]	2,0	

fischer injection system FIS V Plus for masonry

Performance
Horizontal perforated brick LLz, dimensions, installation parameters

Annex C 81

Electronic copy of the ETA by DIBt: ETA-20/0729

Horizontal perforated brick LLz, EN 771-1:2015

Table C82.1: Characteristic resistance under tension load

Anchor rod			**M6**	**M8**
Perforated sleeve FIS H K			**12x50**	
$N_{Rk} = N_{Rk,p} = N_{Rk,b}$ [kN] depending on the compressive strength f_b (temperature range 50/80°C)				
compressive strength f_b	use category			
2 N/mm²	w/w	w/d	0,5	
	d/d		0,6	
4 N/mm²	w/w	w/d	0,9	
	d/d		1,2	
6 N/mm²	w/w	w/d	1,5	
	d/d		1,5	

Factor for temperature range 72/120°C: 0,83

Table C82.2: Characteristic resistance under shear load

Anchor rod			**M6**	**M8**
Perforated sleeve FIS H K			**12x50**	
$V_{Rk} = V_{Rk,b} = V_{Rk,c}$ [kN] depending on the compressive strength f_b (temperature range 50/80°C and 72/120°C)				
compressive strength f_b	use category			
2 N/mm²	w/w	w/d	0,5	
	d/d			
4 N/mm²	w/w	w/d	0,9	
	d/d			
6 N/mm²	w/w	w/d	1,5	
	d/d			

Factor for job site tests and displacements see annex C110

Electronic copy of the ETA by DIBt: ETA-20/0729

Horizontal perforated brick LLz, EN 771-1:2015

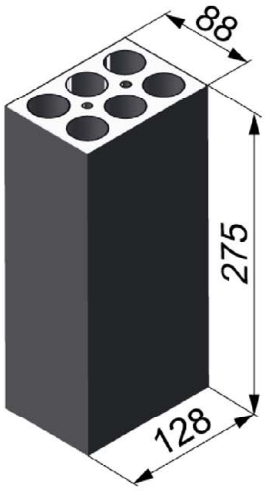

Horizontal perforated brick LLz, EN 771-1:2015			
Producer	e.g. Cermanica Farreny S.A.		
Nominal dimensions [mm]	length L	width W	height H
	275	88	128
Density ρ [kg/dm³]	≥ 0,8		
Compressive strength f_b [N/mm²]	2		
Standard or annex	EN 771-1:2015		

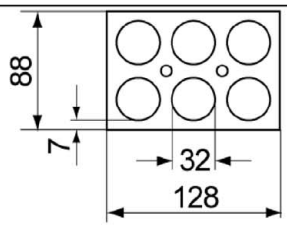

Dimension see also Annex B 19

Table C83.1: Installation parameters

Anchor rod			**M6**	**M8**
Perforated sleeve FIS H K			**12x50**	
Anchor rod with perforated sleeve FIS H K				
Max. installation torque	T_{inst}	[Nm]	2	
General installation parameters				
Edge distance	c_{min}	[mm]	60	
Spacing	s_{min} ∥	[mm]	75	
	s_{cr} ∥	[mm]	275	
	s_{min} ⊥	[mm]	75	
	s_{cr} ⊥	[mm]	130	
Drilling method				
Hammer drilling with hard metal hammer drill				

Table C83.2: Group factors

Anchor rod			**M6**	**M8**
Perforated sleeve FIS H K			**12x50**	
Group factors	$\alpha_{g,N}$ ∥	[-]	1,3	
	$\alpha_{g,V}$ ∥	[-]	1,5	
	$\alpha_{g,N}$ ⊥	[-]	1,3	
	$\alpha_{g,V}$ ⊥	[-]	1,5	

fischer injection system FIS V Plus for masonry

Performance
Horizontal perforated brick LLz, dimensions, installation parameters

Annex C 83

Electronic copy of the ETA by DIBt: ETA-20/0729

Horizontal perforated brick LLz, EN 771-1:2015

Table C84.1: Characteristic resistance under tension load

Anchor rod			**M6**	**M8**
Perforated sleeve FIS H K			**12x50**	
$N_{Rk} = N_{Rk,p} = N_{Rk,b}$ [kN] depending on the compressive strength f_b (temperature range 50/80°C)				
compressive strength f_b	use category			
2 N/mm²	w/w	w/d	1,5	
	d/d			

Factor for temperature range 72/120°C: 0,83

Table C84.2: Characteristic resistance under shear load

Anchor rod			**M6**	**M8**
Perforated sleeve FIS H K			**12x50**	
$V_{Rk} = V_{Rk,b} = V_{Rk,c}$ [kN] depending on the compressive strength f_b (temperature range 50/80°C and 72/120°C)				
compressive strength f_b	use category			
2 N/mm²	w/w	w/d	1,2	
	d/d			

Factor for job site tests and displacements see annex C110

Electronic copy of the ETA by DIBt: ETA-20/0729

Light-weight concrete hollow block Hbl, EN 771-3:2015

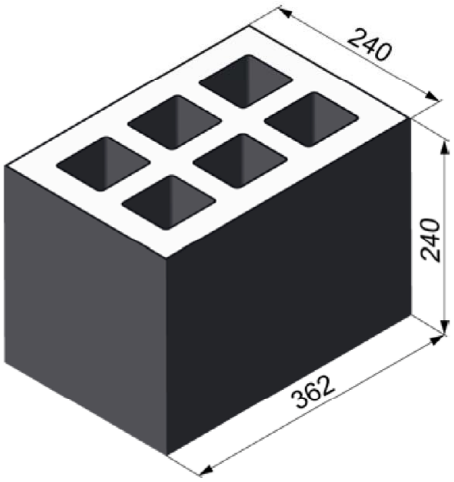

Light-weight concrete hollow block Hbl, EN 771-3:2015			
Producer	-		
Nominal dimensions [mm]	Länge L	Breite B	Höhe H
	362	240	240
Density ρ [kg/dm³]	≥ 1,0		
Compressive strength f_b [N/mm²]	2 / 4		
Standard or annex	EN 771-3:2015		

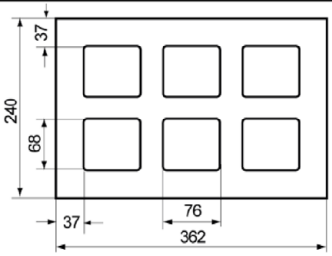

Dimension see also Annex B 19

Table C85.1: Installation parameters
(Pre-positioned anchorage with perforated sleeve FIS H K)

Anchor rod			**M6**	**M8**	**M6**	**M8**	**-**	**M8**	**M10**	**M8**	**M10**	**-**	**M12**	**M16**	**M12**	**M16**	**M12**	**M16**
Internal threaded anchor FIS E			-		-		**M6** / **11x85**	**M8**	-	-		**M10** / **15x85**	**M12**	-	-		-	
Perforated sleeve FIS H K			**12x50**		**12x85**		**16x85**			**16x130**		**20x85**			**20x130**		**20x200**	
Anchor rod and internal threaded anchor FIS E with perforated sleeve FIS H K																		
Max. installation torque	T_{inst}	[Nm]	2															
General installation parameters																		
Edge distance	c_{min}	[mm]	60															
Spacing	s_{min} ∥	[mm]	100															
	s_{cr} ∥	[mm]	362															
	s_{min} ⊥ = s_{cr} ⊥	[mm]	240															
Drilling method																		
Hammer drilling with hard metal hammer drill																		

Table C85.2: Group factors

Anchor rod			**M6**	**M8**	**M6**	**M8**	**-**	**M8**	**M10**	**M8**	**M10**	**-**	**M12**	**M16**	**M12**	**M16**	**M12**	**M16**
Internal threaded anchor FIS E			-		-		**M6** / **11x85**	**M8**	-	-		**M10** / **15x85**	**M12**	-	-		-	
Perforated sleeve FIS H K			**12x50**		**12x85**		**16x85**			**16x130**		**20x85**			**20x130**		**20x200**	
Group factors	$\alpha_{g,N}$ ∥	[-]	1,2															
	$\alpha_{g,V}$ ∥	[-]	1,1															
	$\alpha_{g,N}$ ⊥	[-]	2,0															
	$\alpha_{g,V}$ ⊥	[-]																

fischer injection system FIS V Plus for masonry

Performance
Light-weight concrete hollow block Hbl, dimensions, installation parameters

Annex C 85

Electronic copy of the ETA by DIBt: ETA-20/0729

Light-weight concrete hollow block Hbl, EN 771-3:2015

Table C86.1: Installation parameters
(Push through anchorage with perforated sleeve FIS H K)

Anchor rod			**M10**	**M12**	**M16**
Perforated sleeve FIS H K			**18x130/200**		**22x130/200**
Anchor rod with perforated sleeve FIS H K					
Max. installation torque	T_{inst}	[Nm]	2		
General installation parameters					
Edge distance	c_{min}	[mm]	60		
Spacing	s_{min} ∥	[mm]	100		
	s_{cr} ∥	[mm]	362		
	s_{min} ⊥ = s_{cr} ⊥	[mm]	240		
Drilling method					
Hammer drilling with hard metal hammer drill					

Table C86.2: Group factors

Anchor rod			**M10**	**M12**	**M16**
Perforated sleeve FIS H K			**18x130/200**		**22x130/200**
Group factors	$\alpha_{g,N}$ ∥	[-]	1,2		
	$\alpha_{g,V}$ ∥	[-]	1,1		
	$\alpha_{g,N}$ ⊥	[-]	2,0		
	$\alpha_{g,V}$ ⊥	[-]			

fischer injection system FIS V Plus for masonry

Performance
Light-weight concrete hollow block Hbl, dimensions, installation parameters

Annex C 86

Electronic copy of the ETA by DIBt: ETA-20/0729

Light-weight concrete hollow block Hbl, EN 771-3:2015

Table C87.1: Characteristic resistance under tension load (Pre-positioned anchorage)

Anchor rod	**M6**	**M8**	**M6**	**M8**	**-**	**M8**	**M10**	**M8**	**M10**	**-**	**M12**	**M16**	**M12**	**M16**	**M12**	**M16**
Internal threaded anchor FIS E	**-**		**-**		**M6 M8** / **11x85**	**-**		**-**		**M10 M12** / **15x85**	**-**		**-**		**-**	
Perforated sleeve FIS H K	**12x50**		**12x85**		**16x85**			**16x130**		**20x85**			**20x130**		**20x200**	

$N_{Rk} = N_{Rk,p} = N_{Rk,b}$ [kN] depending on the compressive strength f_b (temperature range 50/80°C)					
compressive strength f_b	use category				
2 N/mm²	w/w	w/d	1,2	1,5	2,5
	d/d		1,2	1,5	2,5
4 N/mm²	w/w	w/d	2,0	3,0	5,0
	d/d		2,5	3,0	5,5

Table C87.2: Characteristic resistance under tension load (Push through anchorage)

Anchor rod	**M10**	**M12**	**M16**
Perforated sleeve FIS H K	**18x130/200**		**22x130/200**

$N_{Rk} = N_{Rk,p} = N_{Rk,b}$ [kN] depending on the compressive strength f_b (temperature range 50/80°C)			
compressive strength f_b	use category		
2 N/mm²	w/w	w/d	1,5
	d/d		1,5
4 N/mm²	w/w	w/d	3,0
	d/d		3,0

Factor for job site tests and displacements see annex C110

Factor for temperature range 72/120°C: 0,83

Electronic copy of the ETA by DIBt: ETA-20/0729

Light-weight concrete hollow block Hbl, EN 771-3:2015

Table C88.1: Characteristic resistance under shear load (Pre-positioned anchorage)

Anchor rod	**M6**	**M8**	**M6**	**M8**	**-**	**M8**	**M10**	**M8**	**M10**	**-**	**M12**	**M16**	**M12**	**M16**	**M12**	**M16**
Internal threaded anchor FIS E	**-**		**-**		**M6 M8** / **11x85**	**-**		**-**		**M10 M12** / **15x85**	**-**		**-**		**-**	
Perforated sleeve FIS H K	**12x50**		**12x85**		**16x85**			**16x130**		**20x85**			**20x130**		**20x200**	
$V_{Rk} = V_{Rk,b} = V_{Rk,c}$ [kN] depending on the compressive strength f_b (temperature range 50/80°C and 72/120°C)																
compressive strength **f_b**	use category															
2 N/mm²	w/w	w/d														
	d/d															
4 N/mm²	w/w	w/d														
	d/d															

Table C88.2: Characteristic resistance under shear load (Push through anchorage)

Anchor rod	**M10**	**M12**	**M16**
Perforated sleeve FIS H K	**18x130/200**		**22x130/200**
$V_{Rk} = V_{Rk,b} = V_{Rk,c}$ [kN] depending on the compressive strength f_b (temperature range 50/80°C and 72/120°C)			
compressive strength **f_b**	use category		
2 N/mm²	w/w w/d		
	d/d		
4 N/mm²	w/w w/d		
	d/d		

Factor for job site tests and displacements see annex C110

Electronic copy of the ETA by DIBt: ETA-20/0729

Light-weight concrete hollow block Hbl, EN 771-3:2015

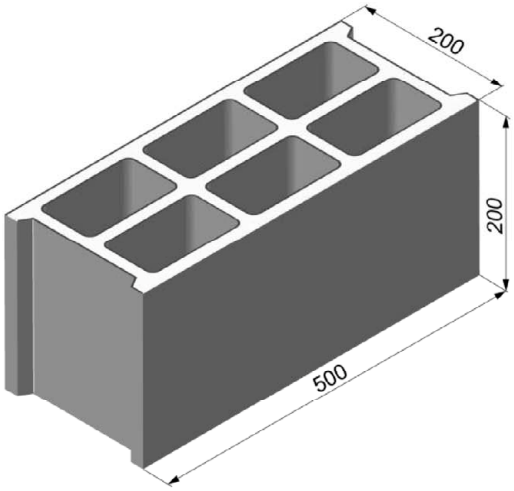

Light-weight concrete hollow block Hbl, EN 771-3:2015			
Producer	e.g. Sepa		
Nominal dimensions [mm]	length L	width W	height H
	500	200	200
Density ρ [kg/dm³]	≥ 1,0		
Compressive strength f_b [N/mm²]	2 / 4 / 6		
Standard or annex	EN 771-1:2015		

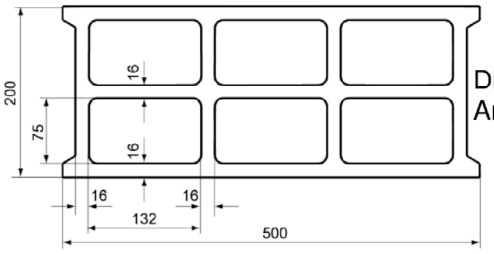

Dimension see also Annex B 19

Table C89.1: Installation parameters

Anchor rod	M6	M8	M6	M8	-		M8	M10	M8	M10	M10	M12	-		M12	M16
Internal threaded anchor FIS E	-		-		M6	M8	-		-		-		M10	M12	-	
					11x85								15x85			
Perforated sleeve FIS H K	12x50		12x85		16x85				16x130		18x130/200		20x85			

Anchor rod and internal threaded anchor FIS E with perforated sleeve FIS H K				
Max. installation torque	T_{inst}	[Nm]	1	2
General installation parameters				
Edge distance	c_{min}	[mm]	100	
Spacing	s_{min} ∥ = s_{cr} ∥	[mm]	500	
	s_{min} ⊥ = s_{cr} ⊥	[mm]	200	
Drilling method				
Hammer drilling with hard metal hammer drill				

Table C89.2: Group factors

Anchor rod	M6	M8	M6	M8	-		M8	M10	M8	M10	M10	M12	-		M12	M16
Internal threaded anchor FIS E	-		-		M6	M8	-		-		-		M10	M12	-	
					11x85								15x85			
Perforated sleeve FIS H K	12x50		12x85		16x85				16x130		18x130/200		20x85			
Group factors	$\alpha_{g,N}$ ∥	[-]	2													
	$\alpha_{g,V}$ ∥															
	$\alpha_{g,N}$ ⊥															
	$\alpha_{g,V}$ ⊥															

fischer injection system FIS V Plus for masonry

Performance
Light-weight concrete hollow block Hbl, dimensions, installation parameters

Annex C 89

Electronic copy of the ETA by DIBt: ETA-20/0729

Light-weight concrete hollow block Hbl, EN 771-3:2015

Table C90.1: Characteristic resistance under tension load

Anchor rod	**M6**	**M8**	**M6**	**M8**	**-**	**M8**	**M10**	**M8**	**M10**	**M10**	**M12**	**-**	**M12**	**M16**
Internal threaded anchor FIS E	**-**		**-**		**M6 M8** / **11x85**	**-**		**-**		**-**		**M10 M12** / **15x85**	**-**	
Perforated sleeve FIS H K	**12x50**		**12x85**		**16x85**			**16x130**		**18x130/200**		**20x85**		

$N_{Rk} = N_{Rk,p} = N_{Rk,b}$ [kN] depending on the compressive strength f_b (temperature range 50/80°C)			
compressive strength **f_b**	use category		
2 N/mm²	w/w	w/d	0,4
	d/d		0,5
4 N/mm²	w/w	w/d	0,9
	d/d		0,9
6 N/mm²	w/w	w/d	1,2
	d/d		1,5

Factor for temperature range 72/120°C: 0,83

Table C90.2: Characteristic resistance under shear load

Anchor rod	**M6**	**M8**	**M6**	**M8**	**-**	**M8**	**M10**	**M8**	**M10**	**M10**	**M12**	**-**	**M12**	**M16**
Internal threaded anchor FIS E	**-**		**-**		**M6 M8** / **11x85**	**-**		**-**		**-**		**M10 M12** / **15x85**	**-**	
Perforated sleeve FIS H K	**12x50**		**12x85**		**16x85**			**16x130**		**18x130/200**		**20x85**		

$V_{Rk} = V_{Rk,b} = V_{Rk,c}$ [kN] depending on the compressive strength f_b (temperature range 50/80°C and 72/120°C)			
compressive strength **f_b**	use category		
2 N/mm²	w/w	w/d	0,9
	d/d		
4 N/mm²	w/w	w/d	1,5
	d/d		
6 N/mm²	w/w	w/d	2,5
	d/d		

Factor for job site tests and displacements see annex C110

Electronic copy of the ETA by DIBt: ETA-20/0729

Light-weight concrete hollow block Hbl, EN 771-3:2015

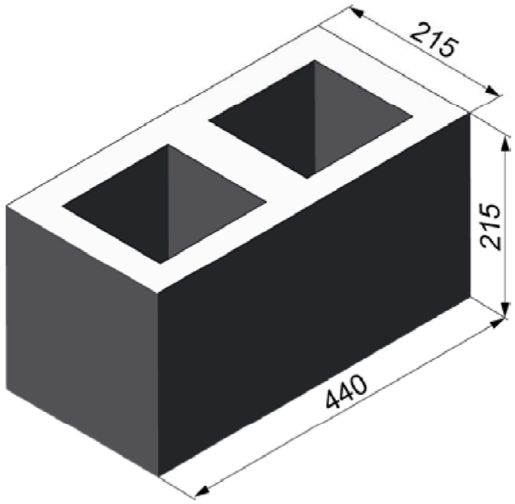

Light-weight concrete hollow block Hbl, EN 771-3:2015			
Producer	e.g. Roadstone wood		
Nominal dimensions [mm]	length L	width W	height H
	440	215	215
Density ρ [kg/dm³]	≥ 1,2		
Compressive strength f_b [N/mm²]	4 / 6 / 8 / 10		
Standard or annex	EN 771-3:2015		

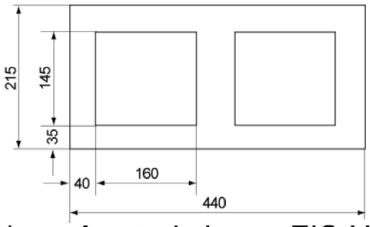

Dimension see also Annex B 19

Table C91.1: Installation parameters
(Pre-positioned anchorage with perforated sleeve FIS H K)

Anchor rod			**M6**	**M8**	**M6**	**M8**	**-**	**M8**	**M10**	**M8**	**M10**	**-**	**M12**	**M16**	**M12**	**M16**
Internal threaded anchor FIS E			**-**		**-**		**M6 M8** / **11x85**	**-**		**-**		**M10 M12** / **15x85**	**-**		**-**	
Perforated sleeve FIS H K			**12x50**		**12x85**		**16x85**			**16x130**		**20x85**			**20x130**	
Anchor rod and internal threaded anchor FIS E with perforated sleeve FIS H K																
Max. installation torque	T_{inst}	[Nm]	2													
General installation parameters																
Edge distance	c_{min}	[mm]	110													
Spacing	s_{min} ∥	[mm]	100													
	s_{cr} ∥	[mm]	440													
	s_{min} ⊥	[mm]	100													
	s_{cr} ⊥	[mm]	215													
Drilling method																
Hammer drilling with hard metal hammer drill																

Table C91.2: Group factors

Anchor rod			**M6**	**M8**	**M6**	**M8**	**-**	**M8**	**M10**	**M8**	**M10**	**-**	**M12**	**M16**	**M12**	**M16**
Internal threaded anchor FIS E			**-**		**-**		**M6 M8** / **11x85**	**-**		**-**		**M10 M12** / **15x85**	**-**		**-**	
Perforated sleeve FIS H K			**12x50**		**12x85**		**16x85**			**16x130**		**20x85**			**20x130**	
Group factors	$\alpha_{g,N}$ ∥	[-]	1,4													
	$\alpha_{g,V}$ ∥	[-]	2,0													
	$\alpha_{g,N}$ ⊥	[-]	1,4													
	$\alpha_{g,V}$ ⊥	[-]	1,2													

fischer injection system FIS V Plus for masonry

Performance
Light-weight concrete hollow block Hbl, dimensions, installation parameters

Annex C 91

Electronic copy of the ETA by DIBt: ETA-20/0729

Light-weight concrete hollow block Hbl, EN 771-3:2015

Table C92.1: Installation parameters
(Push through anchorage with perforated sleeve FIS H K)

Anchor rod			**M10**	**M12**	**M16**
Perforated sleeve FIS H K			**18x130/200**		**22x130/200**
Anchor rod with perforated sleeve FIS H K					
Max. installation torque	T_{inst}	[Nm]	2		
General installation parameters					
Edge distance	c_{min}	[mm]	110		
Spacing	s_{min} ∥	[mm]	100		
	s_{cr} ∥	[mm]	440		
	s_{min} ⊥	[mm]	100		
	s_{cr} ⊥	[mm]	215		
Drilling method					
Hammer drilling with hard metal hammer drill					

Table C92.2: Group factors

Anchor rod			**M10**	**M12**	**M16**
Perforated sleeve FIS H K			**18x130/200**		**22x130/200**
Group factors	$\alpha_{g,N}$ ∥	[-]	1,4		
	$\alpha_{g,V}$ ∥	[-]	2,0		
	$\alpha_{g,N}$ ⊥	[-]	1,4		
	$\alpha_{g,V}$ ⊥	[-]	1,2		

fischer injection system FIS V Plus for masonry

Performance
Light-weight concrete hollow block Hbl, dimensions, installation parameters

Annex C 92

Electronic copy of the ETA by DIBt: ETA-20/0729

Light-weight concrete hollow block Hbl, EN 771-3:2015

Table C93.1: Characteristic resistance under tension load (Pre-positioned anchorage)

Anchor rod			**M6**	**M8**	**M6**	**M8**	**-**		**M8**	**M10**	**M8**	**M10**	**-**		**M12**	**M16**	**M12**	**M16**
Internal threaded anchor FIS E			**-**		**-**		**M6**	**M8**	**-**		**-**		**M10**	**M12**	**-**		**-**	
							11x85						**15x85**					
Perforated sleeve FIS H K			**12x50**		**12x85**		**16x85**				**16x130**		**20x85**				**20x130**	
$N_{Rk} = N_{Rk,p} = N_{Rk,b}$ [kN] depending on the compressive strength f_b (temperature range 50/80°C)																		
compressive strength f_b	use category																	
4 N/mm²	w/w	w/d	0,9				1,2						2,0					
	d/d		1,2				1,5						2,0					
6 N/mm²	w/w	w/d	1,5				2,0						3,0					
	d/d		1,5				2,0						3,0					
8 N/mm²	w/w	w/d	2,0				2,5						3,5					
	d/d		2,0				3,0						4,0					
10 N/mm²	w/w	w/d	2,5				3,0						4,5					
	d/d		3,0				3,5						5,0					

Table C93.2: Characteristic resistance under tension load (Push through anchorage)

Anchor rod			**M10**	**M12**	**M16**
Perforated sleeve FIS H K			**18x130/200**		**22x130/200**
$N_{Rk} = N_{Rk,p} = N_{Rk,b}$ [kN] depending on the compressive strength f_b (temperature range 50/80°C)					
compressive strength f_b	use category				
4 N/mm²	w/w	w/d	1,2		2,0
	d/d		1,5		2,0
6 N/mm²	w/w	w/d	2,0		3,0
	d/d		2,0		3,0
8 N/mm²	w/w	w/d	2,5		3,5
	d/d		3,0		4,0
10 N/mm²	w/w	w/d	3,0		4,5
	d/d		3,5		5,0

Factor for job site tests and displacements see annex C110

Factor for temperature range 72/120°C: 0,83

fischer injection system FIS V Plus for masonry

Performance
Light-weight concrete hollow block Hbl, Characteristic resistance under tension load

Annex C 93

Electronic copy of the ETA by DIBt: ETA-20/0729

Light-weight concrete hollow block Hbl, EN 771-3:2015

Table C94.1: Characteristic resistance under shear load (Pre-positioned anchorage)

Anchor rod		**M6**	**M8**	**M6**	**M8**	**-**		**M8**	**M10**	**M8**	**M10**	**-**		**M12**	**M16**	**M12**	**M16**
Internal threaded anchor FIS E		**-**		**-**		**M6** / **11x85**	**M8**	**-**		**-**		**M10** / **15x85**	**M12**	**-**		**-**	
Perforated sleeve FIS H K		**12x50**		**12x85**		**16x85**				**16x130**		**20x85**				**20x130**	
$V_{Rk} = V_{Rk,b} = V_{Rk,c}$ [kN] depending on the compressive strength f_b (temperature range 50/80°C and 72/120°C)																	
compressive strength f_b	use category																
4 N/mm²	w/w, w/d, d/d	0,75	1,2	0,75	1,2	0,75	1,2										
6 N/mm²	w/w, w/d, d/d	1,2	2,0	1,2	2,0	1,2	2,0										
8 N/mm²	w/w, w/d, d/d	1,5	2,5	1,5	2,5	1,5	2,5										
10 N/mm²	w/w, w/d, d/d	2,0	3,0	2,0	3,0	2,0	3,0										

Table C94.2: Characteristic resistance under shear load (Push through anchorage)

Anchor rod		**M10**	**M12**	**M16**
Perforated sleeve FIS H K		**18x130/200**		**22x130/200**
$V_{Rk} = V_{Rk,b} = V_{Rk,c}$ [kN] depending on the compressive strength f_b (temperature range 50/80°C and 72/120°C)				
compressive strength f_b	use category			
4 N/mm²	w/w, w/d, d/d	1,2		
6 N/mm²	w/w, w/d, d/d	2,0		
8 N/mm²	w/w, w/d, d/d	2,5		
10 N/mm²	w/w, w/d, d/d	3,0		

Factor for job site tests and displacements see annex C110

Electronic copy of the ETA by DIBt: ETA-20/0729

Light-weight concrete solid block Vbl, EN 771-3:2015

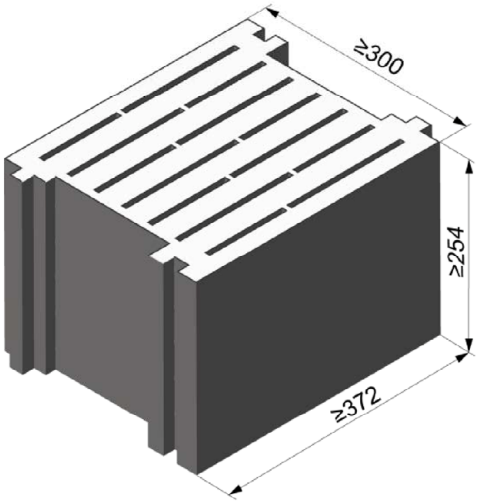

Light-weight concrete solid block Vbl, EN 771-3:2015			
Producer	e.g. Sepa		
Nominal dimensions [mm]	length L	width W	height H
	≥ 372	≥ 300	≥ 254
Density ρ [kg/dm³]	≥ 0,6		
Compressive strength f_b [N/mm²]	2		
Standard or annex	EN 771-3:2015		

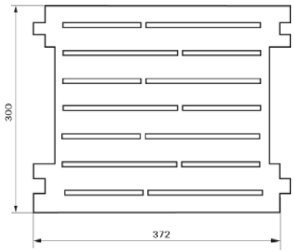

Table C95.1: Installation parameters

Anchor rod			M8	M10	M10	M12	M12	M16	M16	M12	M16
Perforated sleeve FIS H K			**16x130**		**18x130/200**		**20x130**		**22x130/200**	**20x200**	
Anchor rod with perforated sleeve FIS H K											
Max. installation torque	T_{inst}	[Nm]	4								
General installation parameters											
Edge distance	c_{min}	[mm]	130								
Spacing	s_{min} ∥ = s_{cr} ∥	[mm]	370								
	s_{min} ⊥ = s_{cr} ⊥	[mm]	250								
Drilling method											
Hammer drilling with hard metal hammer drill											

Table C95.2: Group factors

Anchor rod			M8	M10	M10	M12	M12	M16	M16	M12	M16
Perforated sleeve FIS H K			**16x130**		**18x130/200**		**20x130**		**22x130/200**	**20x200**	
Group factors	$\alpha_{g,N}$ ∥	[-]	2								
	$\alpha_{g,V}$ ∥	[-]	2								
	$\alpha_{g,N}$ ⊥	[-]	2								
	$\alpha_{g,V}$ ⊥	[-]	2								

fischer injection system FIS V Plus for masonry

Performance
Light-weight concrete solid block Vbl, dimensions, installation parameters

Annex C 95

Electronic copy of the ETA by DIBt: ETA-20/0729

Light-weight concrete solid block Vbl, EN 771-3:2015

Table C96.1: Characteristic resistance under tension load

Anchor rod			**M8**	**M10**	**M10**	**M12**	**M12**	**M16**	**M16**	**M12**	**M16**
Perforated sleeve FIS H K			**16x130**		**18x130/200**		**20x130**		**22x130/200**	**20x200**	
$N_{Rk} = N_{Rk,p} = N_{Rk,b}$ [kN] depending on the compressive strength f_b (temperature range 50/80°C)											
compressive strength f_b	use category										
2 N/mm²	w/w	w/d	2,0				2,5			3,0	
	d/d		2,0				3,0			4,0	

Factor for temperature range 72/120°C: 0,83

Table C96.2: Characteristic resistance under shear load

Anchor rod			**M8**	**M10**	**M10**	**M12**	**M12**	**M16**	**M16**	**M12**	**M16**
Perforated sleeve FIS H K			**16x130**		**18x130/200**		**20x130**		**22x130/200**	**20x200**	
$V_{Rk} = V_{Rk,b} = V_{Rk,c}$ [kN] depending on the compressive strength f_b (temperature range 50/80°C and 72/120°C)											
compressive strength f_b	use category										
2 N/mm²	w/w	w/d	4,5						6,5		
	d/d										

Factor for job site tests and displacements see annex C110

Electronic copy of the ETA by DIBt: ETA-20/0729

Light-weight concrete solid block Vbl, EN 771-3:2015

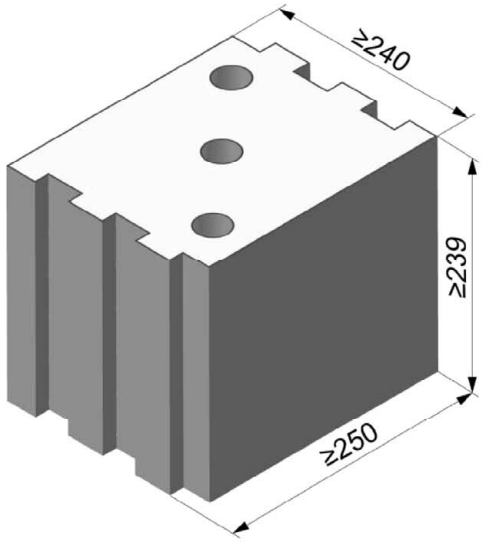

Light-weight concrete solid block Vbl, EN 771-3:2015			
Producer	KLB		
Nominal dimensions [mm]	length L	width W	height H
	≥ 250	≥ 240	≥ 239
Density ρ [kg/dm³]	≥ 1,6		
Compressive strength f_b [N/mm²]	4 / 6 / 8		
Standard or annex	EN 771-3:2015		

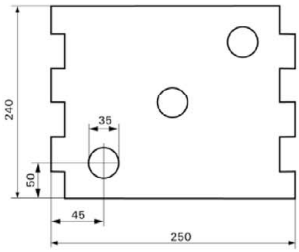

Dimension see also Annex B 19

Table C97.1: Installation parameters
(Pre-positioned anchorage with perforated sleeve FIS H K)

Anchor rod	M6	M8	M6	M8	-	M8	M10	M8	M10	-	M12	M16	M12	M16	M12	M16
Internal threaded anchor FIS E	-		-		M6 M8 / 11x85	-		-		M10 M12 / 15x85	-		-		-	
Perforated sleeve FIS H K	12x50		12x85		16x85			16x130		20x85			20x130		20x200	
Anchor rod and internal threaded anchor FIS E with perforated sleeve FIS H K																
Max. installation torque T_{inst} [Nm]	4															
General installation parameters																
Edge distance c_{min} [mm]	130															
Spacing s_{min} ∥ = s_{cr} ∥ [mm]	250															
Spacing s_{min} ⊥ = s_{cr} ⊥ [mm]	250															
Drilling method																
Hammer drilling with hard metal hammer drill																

Table C97.2: Group factors

Anchor rod	M6	M8	M6	M8	-	M8	M10	M8	M10	-	M12	M16	M12	M16	M12	M16
Internal threaded anchor FIS E	-		-		M6 M8 / 11x85	-		-		M10 M12 / 15x85	-		-		-	
Perforated sleeve FIS H K	12x50		12x85		16x85			16x130		20x85			20x130		20x200	
Group factors $\alpha_{g,N}$ ∥, $\alpha_{g,V}$ ∥, $\alpha_{g,N}$ ⊥, $\alpha_{g,V}$ ⊥ [-]	2,0															

fischer injection system FIS V Plus for masonry

Performance
Light-weight concrete solid block Vbl, dimensions, installation parameters

Annex C 97

Electronic copy of the ETA by DIBt: ETA-20/0729

Light-weight concrete solid block Vbl, EN 771-3:2015

Table C98.1: Installation parameters
(Push through anchorage with perforated sleeve FIS H K)

Anchor rod			**M10**	**M12**	**M16**
Perforated sleeve FIS H K			**18x130/200**		**22x130/200**
Anchor rod with perforated sleeve FIS H K					
Max. installation torque	T_{inst}	[Nm]	2		
General installation parameters					
Edge distance	c_{min}	[mm]	130		
Spacing	s_{min} ∥ = s_{cr} ∥	[mm]	250		
	s_{min} ⊥ = s_{cr} ⊥	[mm]	250		
Drilling method					
Hammer drilling with hard metal hammer drill					

Table C98.2: Group factors

Anchor rod			**M10**	**M12**	**M16**
Perforated sleeve FIS H K			**18x130/200**		**22x130/200**
Group factors	$\alpha_{g,N}$ ∥	[-]	2,0		
	$\alpha_{g,V}$ ∥	[-]	2,0		
	$\alpha_{g,N}$ ⊥	[-]	2,0		
	$\alpha_{g,V}$ ⊥	[-]	2,0		

fischer injection system FIS V Plus for masonry

Performance
Light-weight concrete solid block Vbl, dimensions, installation parameters

Annex C 98

Electronic copy of the ETA by DIBt: ETA-20/0729

Light-weight concrete solid block Vbl, EN 771-3:2015

Table C99.1: Characteristic resistance under tension load (Pre-positioned anchorage)

Anchor rod			**M6**	**M8**	**M6**	**M8**	**-**		**M8**	**M10**	**M8**	**M10**	**-**		**M12**	**M16**	**M12**	**M16**	**M12**	**M16**
Internal threaded anchor FIS E			**-**		**-**		**M6**	**M8**	**-**		**-**		**M10**	**M12**	**-**		**-**		**-**	
							11x85						**15x85**							
Perforated sleeve FIS H K			**12x50**		**12x85**		**16x85**				**16x130**		**20x85**				**20x130**		**20x200**	
$N_{Rk} = N_{Rk,p} = N_{Rk,b}$ [kN] depending on the compressive strength f_b (temperature range 50/80°C)																				
compressive strength f_b	use category																			
4 N/mm²	w/w	w/d	1,2		2,0		2,5						3,0							
	d/d		2,0		3,5		4,0						5,0							
6 N/mm²	w/w	w/d	1,5		3,0		4,0						5,0							
	d/d		3,0		5,0		6,5						7,5							
8 N/mm²	w/w	w/d	2,0		4,0		5,0						6,5							
	d/d		4,0		7,0		8,5						9,0							

Table C99.2: Characteristic resistance under tension load (Push through anchorage)

Anchor rod			**M10**	**M12**	**M16**
Perforated sleeve FIS H K			**18x130/200**		**22x130/200**
$N_{Rk} = N_{Rk,p} = N_{Rk,b}$ [kN] depending on the compressive strength f_b (temperature range 50/80°C)					
compressive strength f_b	use category				
4 N/mm²	w/w	w/d	2,5		3,0
	d/d		4,0		5,0
6 N/mm²	w/w	w/d	4,0		5,0
	d/d		6,5		7,5
8 N/mm²	w/w	w/d	5,0		6,5
	d/d		8,5		9,0

Factor for job site tests and displacements see annex C110

Factor for temperature range 72/120°C: 0,83

Electronic copy of the ETA by DIBt: ETA-20/0729

Light-weight concrete solid block Vbl, EN 771-3:2015

Table C100.1: Characteristic resistance under shear load (Pre-positioned anchorage)

Anchor rod			**M6**	**M8**	**M6**	**M8**	**-**		**M8**	**M10**	**M8**	**M10**	**-**		**M12**	**M16**	**M12**	**M16**	**M12**	**M16**
Internal threaded anchor FIS E			**-**		**-**		**M6**	**M8**	**-**		**-**		**M10**	**M12**	**-**		**-**		**-**	
							11x85						**15x85**							
Perforated sleeve FIS H K			**12x50**		**12x85**		**16x85**				**16x130**		**20x85**				**20x130**		**20x200**	
$V_{Rk} = V_{Rk,b} = V_{Rk,c}$ [kN] depending on the compressive strength f_b (temperature range 50/80°C and 72/120°C)																				
compressive strength f_b	use category																			
4 N/mm²	w/w	w/d	2,0	3,0	2,0	3,0	2,0		3,5				4,5							
	d/d																			
6 N/mm²	w/w	w/d	3,0	4,5	3,0	4,5	3,0		5,5				6,5							
	d/d																			
8 N/mm²	w/w	w/d	4,0	6,0	4,0	6,0	4,0		7,0				8,5							
	d/d																			

Table C100.2: Characteristic resistance under shear load (Push through anchorage)

Anchor rod			**M10**	**M12**	**M16**
Perforated sleeve FIS H K			**18x130/200**		**22x130/200**
$V_{Rk} = V_{Rk,b} = V_{Rk,c}$ [kN] depending on the compressive strength f_b (temperature range 50/80°C and 72/120°C)					
compressive strength f_b	use category				
4 N/mm²	w/w	w/d	3,5		4,5
	d/d				
6 N/mm²	w/w	w/d	5,5		6,5
	d/d				
8 N/mm²	w/w	w/d	7,0		8,5
	d/d				

Factor for job site tests and displacements see annex C110

Electronic copy of the ETA by DIBt: ETA-20/0729

Light-weight concrete solid block Vbl, EN 771-3:2015

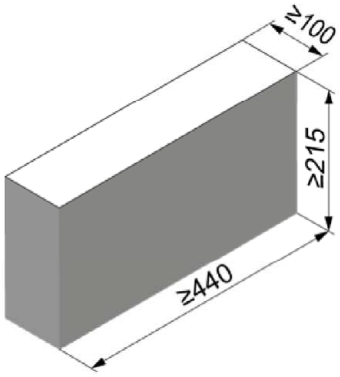

Light-weight concrete solid block Vbl, EN 771-3:2015			
Producer	Roadstone wood		
Nominal dimensions [mm]	length L	width W	height H
	≥ 440	≥ 100	≥ 215
Density ρ [kg/dm³]	≥ 2,0		
Compressive strength f_b [N/mm²]	4 / 6 / 8 / 10		
Standard or annex	EN 771-3:2015		

Table C101.1: Installation parameters

Anchor rod			M6		M8		M10		M12		M16	
Anchor rod without perforated sleeve												
Effective anchorage depth	h_{ef}	[mm]	50	70	50	70	50	70	50	70	50	70
Max. installation torque	T_{inst}	[Nm]	4		10							
General installation parameters												
Edge distance	c_{min}	[mm]	100									
Spacing	s_{min} ∥	[mm]	75									
	s_{cr} ∥	[mm]	3x h_{ef}									
	s_{min} ⊥	[mm]	75									
	s_{cr} ⊥	[mm]	3x h_{ef}									
Drilling method												
Hammer drilling with hard metal hammer drill												

Table C101.2: Group factors

Anchor rod			M6	M8	M10	M12	M16
Group factors	$\alpha_{g,N}$ ∥	[-]	1,6				
	$\alpha_{g,V}$ ∥	[-]	1,3				
	$\alpha_{g,N}$ ⊥	[-]	1,4				
	$\alpha_{g,V}$ ⊥	[-]	1,3				

fischer injection system FIS V Plus for masonry

Performance
Light-weight concrete solid block Vbl, dimensions, installation parameters

Annex C 101

Electronic copy of the ETA by DIBt: ETA-20/0729

Light-weight concrete solid block Vbl, EN 771-3:2015

Table C102.1: Characteristic resistance under tension load

Anchor rod		M6	M8	M10	M12	M16
$N_{Rk} = N_{Rk,p} = N_{Rk,b}$ [kN] depending on the compressive strength f_b (temperature range 50/80°C)						
compressive strength f_b	use category	Effective anchorage depth h_{ef} [mm] ≥ 50				
4 N/mm²	w/w, w/d	1,2	1,2			
	d/d	2,0	2,0			
6 N/mm²	w/w, w/d	1,5	2,0			
	d/d	3,0	3,5			
8 N/mm²	w/w, w/d	2,0	2,5			
	d/d	4,0	4,5			
10N/mm²	w/w, w/d	3,0	3,5			
	d/d	5,0	5,5			

Factor for temperature range 72/120°C: 0,83

Table C102.2: Characteristic resistance under shear load

Anchor rod		M6	M8	M10	M12	M16
$V_{Rk} = V_{Rk,b} = V_{Rk,c}$ [kN] depending on the compressive strength f_b (temperature range 50/80°C and 72/120°C)						
compressive strength f_b	use category	Effective anchorage depth h_{ef} [mm] ≥ 50				
4 N/mm²	w/w, w/d, d/d	1,2	1,5	1,5	1,5	1,5
6 N/mm²	w/w, w/d, d/d	2,0	2,0	2,5	2,5	2,5
8 N/mm²	w/w, w/d, d/d	2,5	2,5	3,0	3,0	3,5
10N/mm²	w/w, w/d, d/d	3,0	3,5	4,0	4,0	4,5

Factor for job site tests and displacements see annex C110

Electronic copy of the ETA by DIBt: ETA-20/0729

Light-weight concrete solid block Vbl, EN 771-3:2015

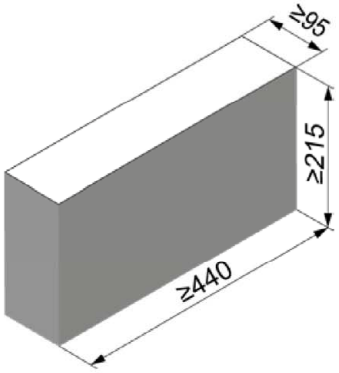

Light-weight concrete solid block Vbl, EN 771-3:2015			
Producer	Tramac		
Nominal dimensions [mm]	length L	width W	height H
	≥ 440	≥ 95	≥ 215
Density ρ [kg/dm³]	≥ 2,0		
Compressive strength f_b [N/mm²]	6 / 8 / 10 / 12		
Standard or annex	EN 771-3:2015		

Table C103.1: Installation parameters

Anchor rod			M6		M8		M10		M12		M16	
Anchor rod without perforated sleeve												
Effective anchorage depth	h_{ef}	[mm]	50	70	50	70	50	70	50	70	50	70
Max. installation torque	T_{inst}	[Nm]	4		10							
General installation parameters												
Edge distance	c_{min}	[mm]	60									
Spacing	s_{min} ∥	[mm]	75									
	s_{cr} ∥	[mm]	3x h_{ef}									
	s_{min} ⊥	[mm]	75									
	s_{cr} ⊥	[mm]	3x h_{ef}									
Drilling method												
Hammer drilling with hard metal hammer drill												

Table C103.2: Group factors

Anchor rod			M6	M8	M10	M12	M16
Group factors	$\alpha_{g,N}$ ∥	[-]	1,9				
	$\alpha_{g,V}$ ∥	[-]	1,4				
	$\alpha_{g,N}$ ⊥	[-]	1,9				
	$\alpha_{g,V}$ ⊥	[-]	1,4				

fischer injection system FIS V Plus for masonry

Performance
Light-weight concrete solid block Vbl, dimensions, installation parameters

Annex C 103

Electronic copy of the ETA by DIBt: ETA-20/0729

Light-weight concrete solid block Vbl, EN 771-3:2015

Table C104.1: Characteristic resistance under tension load

Anchor rod			M6		M8		M10		M12		M16	
$N_{Rk} = N_{Rk,p} = N_{Rk,b}$ [kN] depending on the compressive strength f_b (temperature range 50/80°C)												
compressive strength f_b	use category		Effective anchorage depth h_{ef} [mm]									
			50	70	50	70	50	70	50	70	50	70
6 N/mm²	w/w	w/d	1,5	2,0	1,5	2,0	1,5	2,0	1,5	2,0	1,5	2,0
	d/d		2,5	3,5	2,5	3,5	2,5	3,5	2,5	3,5	2,5	3,5
8 N/mm²	w/w	w/d	2,0	2,5	2,0	2,5	2,0	3,0	2,0	3,0	2,0	3,0
	d/d		3,5	4,5	3,5	4,5	3,5	5,0	3,5	5,0	3,5	5,0
10N/mm²	w/w	w/d	2,5	3,5	2,5	3,5	2,5	3,5	2,5	3,5	2,5	3,5
	d/d		4,5	6,0	4,5	6,0	4,5	6,0	4,5	6,0	4,5	6,0
12N/mm²	w/w	w/d	3,0	4,0	3,0	4,0	3,0	4,5	3,0	4,5	3,0	4,5
	d/d		5,0	7,0	5,0	7,0	5,0	7,5	5,0	7,5	5,0	7,5

Factor for temperature range 72/120°C: 0,83

Table C104.2: Characteristic resistance under shear load

Anchor rod			M6	M8	M10	M12	M16
$V_{Rk} = V_{Rk,b} = V_{Rk,c}$ [kN] depending on the compressive strength f_b (temperature range 50/80°C and 72/120°C)							
compressive strength f_b	use category		Effective anchorage depth h_{ef} [mm] ≥ 50				
6 N/mm²	w/w	w/d	2,0	2,0	2,0	1,5	1,5
	d/d						
8 N/mm²	w/w	w/d	2,5	2,5	3,0	2,5	2,5
	d/d						
10N/mm²	w/w	w/d	3,5	3,5	4,0	3,0	3,0
	d/d						
12N/mm²	w/w	w/d	4,0	4,0	4,5	3,5	3,5
	d/d						

Factor for job site tests and displacements see annex C110

Electronic copy of the ETA by DIBt: ETA-20/0729

Autoclaved aerated concrete (cylindrical drill hole), EN 771-4:2015

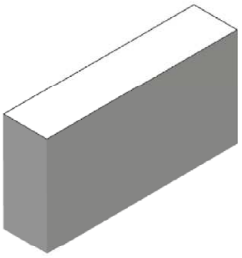

Autoclaved aerated concrete, EN 771-4:2015				
Producer		e.g. Ytong		
Density ρ	[kg/dm³]	0,35	0,5	0,65
Compressive strength f_b	[N/mm²]	2	4	6
Standard or annex		EN 771-4:2015		

Table C105.1: Installation parameters

Anchor rod			**M6**		**M8**		**M10**		**M12**		**M16**		**-**		**-**	
Internal threaded anchor FIS E			**-**		**-**		**-**		**-**		**-**		**M6**	**M8**	**M10**	**M12**
													11x85		**15x85**	
Anchor rod and internal threaded anchor FIS E without perforated sleeve																
Effective anchorage depth	h_{ef}	[mm]	100	200	100	200	100	200	100	200	100	200	85			
Max. installation torque	T_{inst}	[Nm]	1	4	1	8	2	12	2	16	2	20	1		2	
General installation parameters																
Edge distance	c_{min}	[mm]	100													
Spacing	s_{cr} ll = s_{min} ll	[mm]	250													
	h_{ef}=200mm s_{min} ll	[mm]	80													
	h_{ef}=200mm s_{cr} ll	[mm]	3x h_{ef}													
	s_{cr} ⊥ = s_{min} ⊥	[mm]	250													
	h_{ef}=200mm s_{min} ⊥		80													
	h_{ef}=200mm s_{cr} ⊥		3x h_{ef}													
Drilling method																
Hammer drilling with hard metal hammer drill																

fischer injection system FIS V Plus for masonry

Performance
Autoclaved aerated concrete (cylindrical drill hole), dimensions, installation parameters

Annex C 105

Electronic copy of the ETA by DIBt: ETA-20/0729

Table C106.1: Group factors for autoclaved aerated concrete (Compressive strength f_b =2 N/mm²)

Anchor rod			**M6**	**M8**	**M10**	**M12**	**M16**	**-**		**-**	
Internal threaded anchor FIS E			**-**	**-**	**-**	**-**	**-**	**M6**	**M8**	**M10**	**M12**
								11x85		**15x85**	
Group factors	h_{ef}=200 $\alpha_{g,N}$ II	[-]	1,6					-[1]		-[1]	
	h_{ef}=200 $\alpha_{g,V}$ II		1,1					-[1]		-[1]	
	$\alpha_{g,N}$ II, $\alpha_{g,V}$ II		2								
	h_{ef}=200 $\alpha_{g,N}\perp$		1,6					-[1]		-[1]	
	h_{ef}=200 $\alpha_{g,V}\perp$		0,8					-[1]		-[1]	
	$\alpha_{g,N}\perp$, $\alpha_{g,V}\perp$		2								

[1] No performance assessed

Table C106.2: Group factors for autoclaved aerated concrete (Compressive strength f_b =4 N/mm²)

Anchor rod			**M6**	**M8**	**M10**	**M12**	**M16**	**-**		**-**	
Internal threaded anchor FIS E			**-**	**-**	**-**	**-**	**-**	**M6**	**M8**	**M10**	**M12**
								11x85		**15x85**	
Group factors	h_{ef}=200 $\alpha_{g,N}$ II	[-]	0,7					-[1]		-[1]	
	h_{ef}=200 α_{gV} II		2,0					-[1]		-[1]	
	$\alpha_{g,N}$ II, α_{gV} II		2								
	h_{ef}=200 $\alpha_{g,N}\perp$		0,7					-[1]		-[1]	
	h_{ef}=200 $\alpha_{g,V}\perp$		1,2					-[1]		-[1]	
	$\alpha_{g,N}\perp$, $\alpha_{gV}\perp$		2								

[1] No performance assessed

Table C106.3: Group factors for autoclaved aerated concrete (Compressive strength f_b =6 N/mm²)

Anchor rod			**M6**	**M8**	**M10**	**M12**	**M16**	**-**		**-**	
Internal threaded anchor FIS E			**-**	**-**	**-**	**-**	**-**	**M6**	**M8**	**M10**	**M12**
								11x85		**15x85**	
Group factors	h_{ef}=200 $\alpha_{g,N}$ II	[-]	0,7					-[1]		-[1]	
	h_{ef}=200 $\alpha_{g,V}$ II		2,0					-[1]		-[1]	
	$\alpha_{g,N}$ II, $\alpha_{g,V}$ II		2								
	h_{ef}=200 $\alpha_{g,N}\perp$		0,7					-[1]		-[1]	
	h_{ef}=200 $\alpha_{g,V}\perp$		1,2					-[1]		-[1]	
	$\alpha_{g,N}\perp$, $\alpha_{g,V}\perp$		2								

[1] No performance assessed

Electronic copy of the ETA by DIBt: ETA-20/0729

Autoclaved aerated concrete (cylindrical drill hole), EN 771-4:2015

Table C107.1: Characteristic resistance under tension load

Anchor rod		M6		M8		M10		M12		M16		-		-	
Internal threaded anchor FIS E		-		-		-		-		-		M6 / M8		M10 / M12	
												11x85		15x85	
$N_{Rk} = N_{Rk,p} = N_{Rk,b}$ [kN] depending on the compressive strength f_b (temperature range 50/80°C)															
compressive strength f_b	use category	Effective anchorage depth h_{ef} [mm]													
		100	200	100	200	100	200	100	200	100	200	85			
2 N/mm²	w/w w/d	1,2	1,2	1,5	2,0	1,5	3,0	1,5	3,0	2,0	3,0	1,5		1,5	
	d/d	1,5	3,0	1,5	3,0	1,5	3,5	2,0	4,0	2,0	4,0	1,5		1,5	
4 N/mm²	w/w w/d	1,2	-[1]	2,0	1,5	2,5	3,5	2,5	3,5	2,0	3,5	2,0		1,5	
	d/d	1,5	-[1]	2,0	3,0	3,0	5,0	2,5	5,0	2,0	5,0	2,0		1,5	
6 N/mm²	w/w w/d	1,5	-[1]	3,0	2,5	4,5	5,0	4,5	7,0	3,0	8,5	3,5		2,5	
	d/d	1,5	-[1]	3,5	4,0	5,0	7,0	5,0	9,0	3,0	11,5	3,5		2,5	

[1] No performance assessed

Factor for temperature range 72/120°C: 0,83

Table C107.2: Characteristic resistance under shear load

Anchor rod		M6		M8		M10		M12		M16		-		-	
Internal threaded anchor FIS E		-		-		-		-		-		M6 / M8		M10 / M12	
												11x85		15x85	
$V_{Rk} = V_{Rk,b} = V_{Rk,c}$ [kN] depending on the compressive strength f_b (temperature range 50/80°C and 72/120°C)															
compressive strength f_b	use category	Effective anchorage depth h_{ef} [mm]													
		100	200	100	200	100	200	100	200	100	200	85			
2 N/mm²	w/w w/d d/d	1,2	1,2	1,2	1,2	1,2	1,2	1,5	1,2	1,2	1,2	1,2		1,5	
4 N/mm²	w/w w/d d/d	2,0	-[1]	2,5	2,0	2,0	2,0	2,5	2,0	2,0	2,0	2,0		2,5	
6 N/mm²	w/w w/d d/d	2,5	-[1]	3,0	2,5	3,0	3,0	3,5	4,0	4,5	4,5	2,5		3,5	

[1] No performance assessed

Factor for job site tests and displacements see annex C110

Electronic copy of the ETA by DIBt: ETA-20/0729

Autoclaved aerated concrete (conical drill hole with special drill bit PBB), EN 771-4:2015

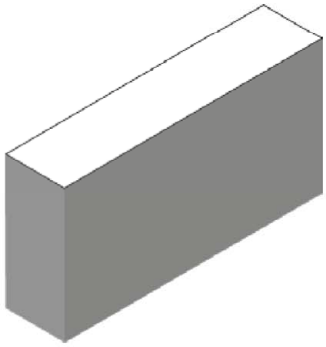

Autoclaved aerated concrete, EN 771-4:2015				
Producer		e.g. Ytong		
Density ρ	[kg/dm³]	0,35	0,5	0,65
Compressive strength f_b	[N/mm²]	2	4	6
Standard or annex		EN 771-4:2015		

Table C108.1: Installation parameters

Anchor rod			**M8**		**M10**		**M12**		**-**	
Internal threaded anchor FIS E			-	-	-	-	-	-	**M6**	**M8**
									11x85	
Anchor rod and internal threaded anchor FIS E without perforated sleeve										
Effective anchorage depth	h_{ef}	[mm]	75	95	75	95	75	95	85	
Max. installation torque	T_{inst}	[Nm]	2							
General installation parameters										
Edge distance	c_{min}	[mm]	120	150	120	150	120	150	150	
Spacing	s_{cr} ∥ = s_{min} ∥	[mm]	240	300	240	300	240	300	300	
	s_{cr} ⊥ = s_{min} ⊥	[mm]	240	250	240	250	240	250	250	
Drilling method										
Hammer drilling with hard metal hammer drill										

Table C108.2: Group factors

Anchor rod			**M8**		**M10**		**M12**		**-**	
Internal threaded anchor FIS E			-	-	-	-	-	-	**M6**	**M8**
									11x85	
Group factors	$\alpha_{g,N}$ ∥	[-]	2							
	$\alpha_{g,V}$ ∥									
	$\alpha_{g,N}$ ⊥									
	$\alpha_{g,V}$ ⊥									

fischer injection system FIS V Plus for masonry

Performance
Autoclaved aerated concrete (conical drill hole with special drill bit PBB), dimensions, installation parameters

Annex C 108

Electronic copy of the ETA by DIBt: ETA-20/0729

Autoclaved aerated concrete (conical drill hole with special drill bit PBB), EN 771-4:2015

Table C109.1: Characteristic resistance under tension load

Anchor rod			M8		M10		M12		-	
Internal threaded anchor FIS E			-	-	-	-	-	-	M6	M8
									11x85	
$N_{Rk} = N_{Rk,p} = N_{Rk,b}$ [kN] depending on the compressive strength f_b (temperature range 50/80°C)										
compressive strength f_b	use category		Effective anchorage depth h_{ef} [mm]							
			75	95	75	95	75	95	85	
2 N/mm²	w/w	w/d	2,0	2,5	2,0	2,5	2,0	2,5	2,0	
	d/d		2,0	2,5	2,0	2,5	2,0	2,5	2,0	
4 N/mm²	w/w	w/d	3,0	3,5	3,0	3,5	3,0	3,5	3,0	
	d/d		3,0	3,5	3,0	3,5	3,0	3,5	3,0	
6 N/mm²	w/w	w/d	3,5	4,0	3,5	4,0	3,5	4,0	3,5	
	d/d		4,0	4,5	4,0	4,5	4,0	4,5	4,0	

Factor for temperature range 72/120°C: 0,83

Table C109.2: Characteristic resistance under shear load

Anchor rod			M8		M10		M12		-	
Internal threaded anchor FIS E			-	-	-	-	-	-	M6	M8
									11x85	
$V_{Rk} = V_{Rk,b} = V_{Rk,c}$ [kN] depending on the compressive strength f_b (temperature range 50/80°C and 72/120°C)										
compressive strength f_b	use category		Effective anchorage depth h_{ef} [mm]							
			75	95	75	95	75	95	85	
2 N/mm²	w/w	w/d	2,5							
	d/d									
4 N/mm²	w/w	w/d	4,5							
	d/d									
6 N/mm²	w/w	w/d	6,0							
	d/d									

Factor for job site tests and displacements see annex C110

Electronic copy of the ETA by DIBt: ETA-20/0729

β-factors for job site tests; displacements

Table C110.1: β-factors for job site tests

use category		w/w and w/d		d/d	
temperature range		50/80	72/120	50/80	72/120
Material	Size				
solid units	M6	0,55	0,46	0,96	0,80
	M8	0,57	0,51		
	M10	0,59	0,52		
	M12 FIS E 11x85	0,6	0,54		
	M16 FIS E 15x85	0,62	0,52		
	FIS H 16x85 K	0,55	0,46		
hollow units	all sizes	0,86	0,72	0,96	0,8
Autoclaved aerated concrete cylindrical drill hole	all sizes	0,73	0,73	0,81	0,81
Autoclaved aerated concrete conical drill hole	all sizes	0,66	0,59	0,73	0,66

Table C110.2: Displacements

Material	N [kN]	δN_0 [mm]	δN_∞ [mm]	V [kN]	δV_0 [mm]	δV_∞ [mm]
solid units and autoclaved aerated concrete h_{ef}=100mm	$\frac{N_{Rk}}{1,4 * \gamma_{Mm}}$	0,03	0,06	$\frac{V_{Rk}}{1,4 * \gamma_{Mm}}$	0,82	0,88
hollow units	$\frac{N_{Rk}}{1,4 * \gamma_{Mm}}$	0,48	0,06	$\frac{V_{Rk}}{1,4 * \gamma_{Mm}}$	1,71	2,56
solid brick Mz NF annex C 4 - C 7	$\frac{N_{Rk}}{1,4 * \gamma_{Mm}}$	0,74	1,48	$\frac{V_{Rk}}{1,4 * \gamma_{Mm}}$	1,23	1,85
solid brick KS NF annex C 14 / C 15	$\frac{N_{Rk}}{1,4 * \gamma_{Mm}}$	0,2	0,4	$\frac{V_{Rk}}{1,4 * \gamma_{Mm}}$	0,91	1,37
AAC h_{ef}=200 mm annex C 105 - C 107	$\frac{N_{Rk}}{1,4 * \gamma_{Mm}}$	1,03	2,06	$\frac{V_{Rk}}{1,4 * \gamma_{Mm}}$	1,25	1,88
brick Annex C 89 / C 90	$\frac{N_{Rk}}{1,4 * \gamma_{Mm}}$	0,03	0,06	$\frac{V_{Rk}}{1,4 * \gamma_{Mm}}$	6,44	9,66

For anchorage in autoclaved aerated concrete, the partial factor γ_{MAAC} shall be used instead of γ_{Mm}.

Electronic copy of the ETA by DIBt: ETA-20/0729

Deutsches Institut für Bautechnik DIBt

Member of EOTA
www.eota.eu

Approval body for construction products and types of construction

Bautechnisches Prüfamt

An institution established by the Federal and Laender Governments

Designated according to Article 29 of Regulation (EU) No 305/2011 and member of EOTA (European Organisation for Technical Assessment)

European Technical Assessment

ETA-20/0603 of 13 November 2020

English translation prepared by DIBt - Original version in German language

General Part

Technical Assessment Body issuing the European Technical Assessment:	Deutsches Institut für Bautechnik
Trade name of the construction product	fischer Injection system FIS V Plus
Product family to which the construction product belongs	Bonded anchor for use in concrete
Manufacturer	fischerwerke GmbH & Co. KG Otto-Hahn-Straße 15 79211 Denzlingen DEUTSCHLAND
Manufacturing plant	fischerwerke
This European Technical Assessment contains	37 pages including 3 annexes which form an integral part of this assessment
This European Technical Assessment is issued in accordance with Regulation (EU) No 305/2011, on the basis of	EAD 330499-01-0601 Edition 04/2020

Electronic copy of the ETA by DIBt: ETA-20/0603

The European Technical Assessment is issued by the Technical Assessment Body in its official language. Translations of this European Technical Assessment in other languages shall fully correspond to the original issued document and shall be identified as such.

Communication of this European Technical Assessment, including transmission by electronic means, shall be in full. However, partial reproduction may only be made with the written consent of the issuing Technical Assessment Body. Any partial reproduction shall be identified as such.

This European Technical Assessment may be withdrawn by the issuing Technical Assessment Body, in particular pursuant to information by the Commission in accordance with Article 25(3) of Regulation (EU) No 305/2011.

Electronic copy of the ETA by DIBt: ETA-20/0603

Specific Part

1 Technical description of the product

The "fischer Injection system FIS V Plus" is a bonded anchor consisting of a cartridge with injection mortar according to Annex A 4 and a steel element according to Annex A 1 to A 3.

The steel element is placed into a drilled hole filled with injection mortar and is anchored via the bond between metal part, injection mortar and concrete.

The product description is given in Annex A.

2 Specification of the intended use in accordance with the applicable European Assessment Document

The performances given in Section 3 are only valid if the anchor is used in compliance with the specifications and conditions given in Annex B.

The verifications and assessment methods on which this European Technical Assessment is based lead to the assumption of a working life of the anchor of at least 50 and/or 100 years. The indications given on the working life cannot be interpreted as a guarantee given by the producer, but are to be regarded only as a means for choosing the right products in relation to the expected economically reasonable working life of the works.

3 Performance of the product and references to the methods used for its assessment

3.1 Mechanical resistance and stability (BWR 1)

Essential characteristic	Performance
Characteristic resistance to tension load (static and quasi-static loading)	See Annex C 1, C 2, C 4 to C 9, B 4, B 5
Characteristic resistance to shear load (static and quasi-static loading)	See Annex C 1 to C 3
Displacements under short-term and long-term loading	See Annex C 10 to C 11
Characteristic resistance and displacements for seismic performance categories C1 and C2	See Annex C 12 to C 15

3.2 Hygiene, health and the environment (BWR 3)

Essential characteristic	Performance
Content, emission and/or release of dangerous substances	No performance assessed

Electronic copy of the ETA by DIBt: ETA-20/0603

4 Assessment and verification of constancy of performance (AVCP) system applied, with reference to its legal base

In accordance with the European Assessment Document EAD 330499-01-0601 the applicable European legal act is: [96/582/EC].

The system to be applied is: 1

5 Technical details necessary for the implementation of the AVCP system, as provided for in the applicable European Assessment Document

Technical details necessary for the implementation of the AVCP system are laid down in the control plan deposited at Deutsches Institut für Bautechnik.

Issued in Berlin 13 November 2020 by Deutsches Institut für Bautechnik

Dipl.-Ing. Beatrix Wittstock
Head of Section

beglaubigt:
Lange

Electronic copy of the ETA by DIBt: ETA-20/0603

Installation conditions part 1

fischer anchor rod

Pre-positioned installation

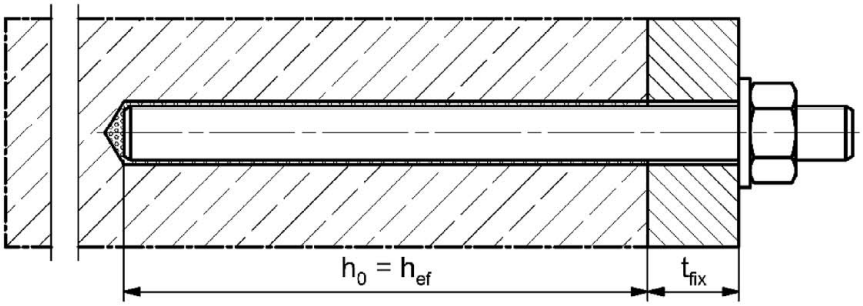

Push through installation (annular gap filled with mortar)

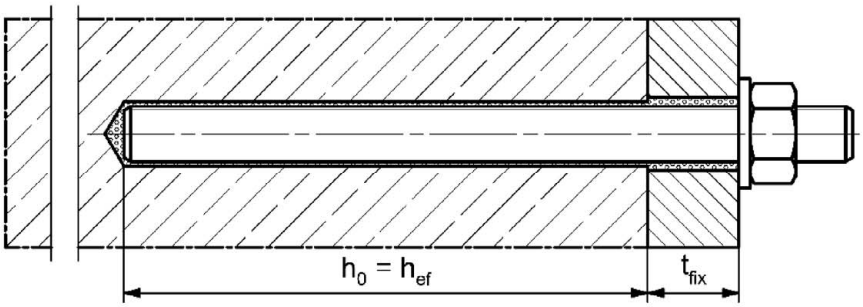

Pre-positioned or push through installation with subsequently injected fischer filling disc
(annular gap filled with mortar)

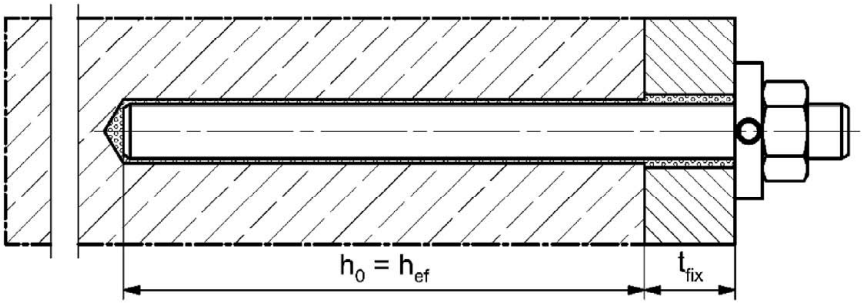

Figures not to scale

h_0 = drill hole depth

h_{ef} = effective embedment depth

t_{fix} = thickness of fixture

fischer injection system FIS V Plus

Product description
Installation conditions part 1

Annex A 1

Electronic copy of the ETA by DIBt: ETA-20/0603

Installation conditions part 2

fischer internal threaded anchor RG MI

Pre-positioned installation

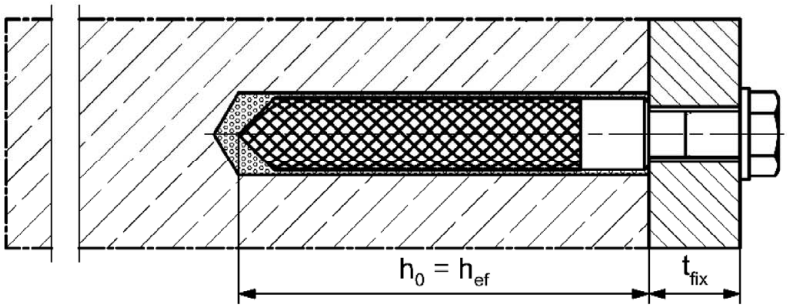

Pre-positioned installation with subsequently injected fischer filling disc (annular gap filled with mortar)

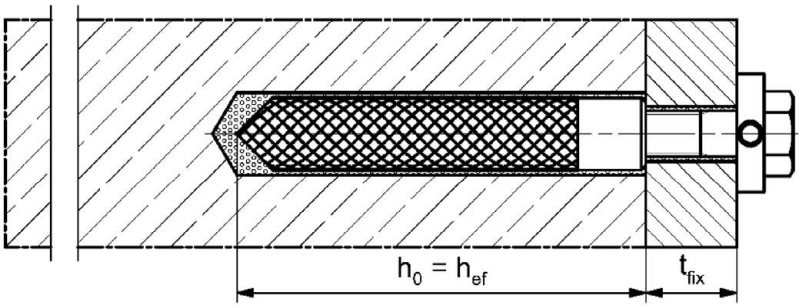

Figures not to scale

h_0 = drill hole depth

h_{ef} = effective embedment depth

t_{fix} = thickness of fixture

fischer injection system FIS V Plus

Product description
Installation conditions part 2

Annex A 2

Electronic copy of the ETA by DIBt: ETA-20/0603

Installation conditions part 3

Reinforcing bar

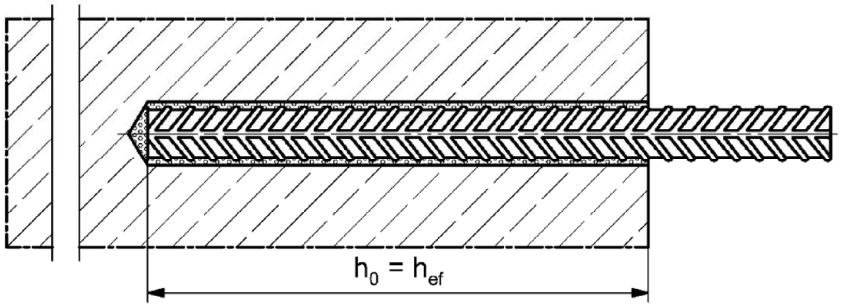

fischer rebar anchor FRA

Pre-positioned installation

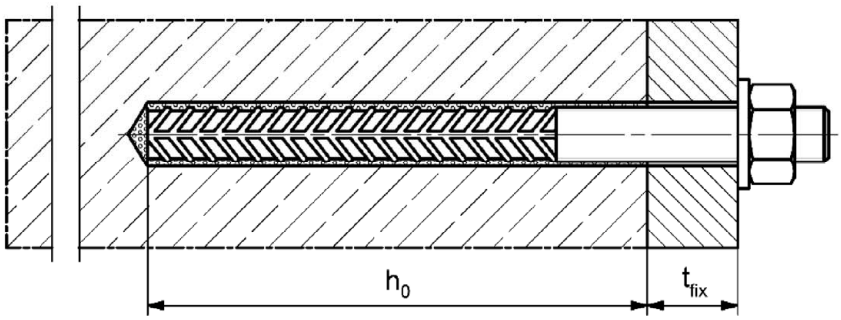

Push through installation (annular gap filled with mortar)

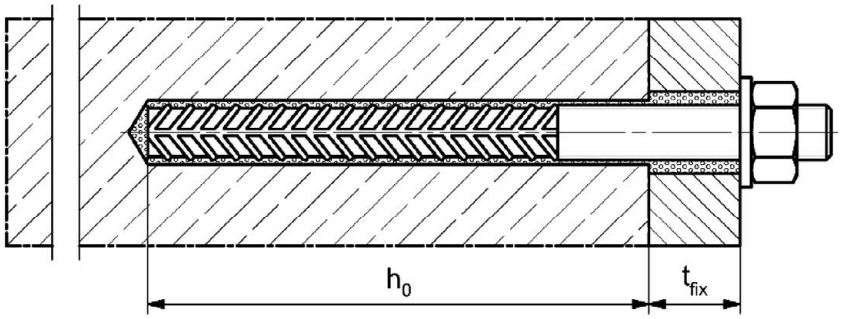

Figures not to scale

h_0 = drill hole depth

h_{ef} = effective embedment depth

t_{fix} = thickness of fixture

fischer injection system FIS V Plus

Product description
Installation conditions part 3

Annex A 3

Electronic copy of the ETA by DIBt: ETA-20/0603

Overview system components part 1

Injection cartridge (shuttle cartridge) with sealing cap; Sizes: 350 ml, 360 ml, 390 ml, 550 ml, 1100 ml, 1500 ml

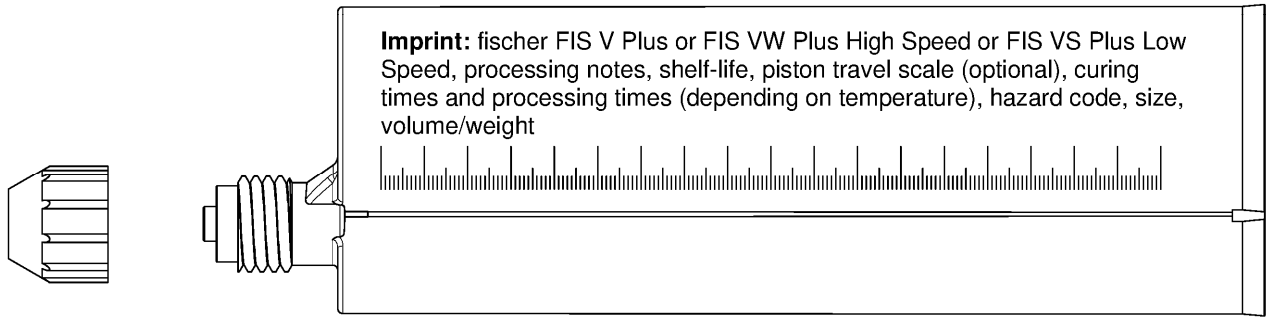

Injection cartridge (coaxial cartridge) with sealing cap; Sizes: 100 ml, 150 ml, 300 ml, 380 ml, 400 ml, 410 ml

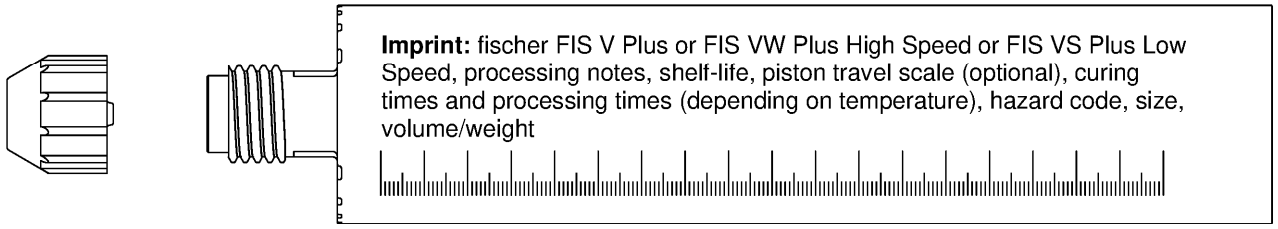

Static mixer FIS MR Plus for injection cartridges up to 410 ml

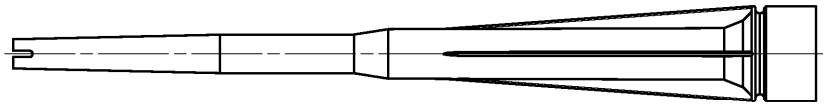

Static mixer FIS UMR for injection cartridges from 550 ml

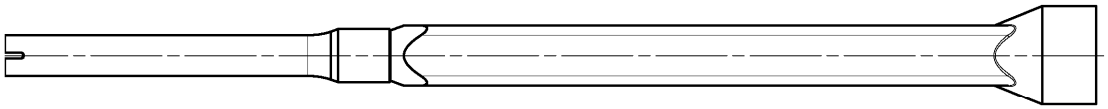

Injection adapter and extension tube Ø 9 for static mixer FIS MR Plus;
Injection adapter and extension tube Ø 9 or Ø 15 for static mixer FIS UMR

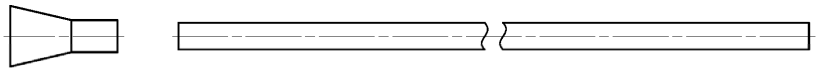

Cleaning brush BS

Blow-out pump

AB G:

ABP:

Figures not to scale

fischer injection system FIS V Plus

Product description
Overview system components part 1;
cartridges / static mixer / accessories

Annex A 4

Electronic copy of the ETA by DIBt: ETA-20/0603

Overview system components part 2

fischer anchor rod

Size: M6, M8, M10, M12, M16, M20, M24, M27, M30

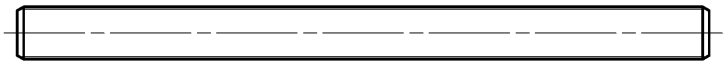

fischer internal threaded anchor RG MI

Size: M8, M10, M12, M16, M20

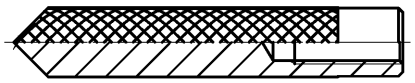

Screw / threaded rod / washer / hexagon nut

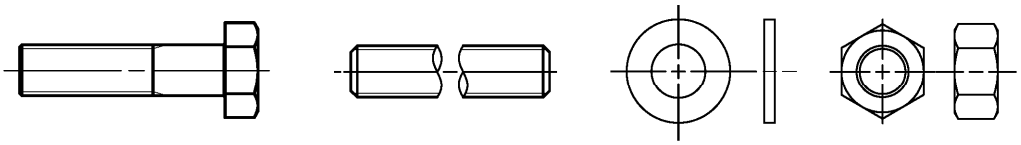

fischer filling disc with injection adapter

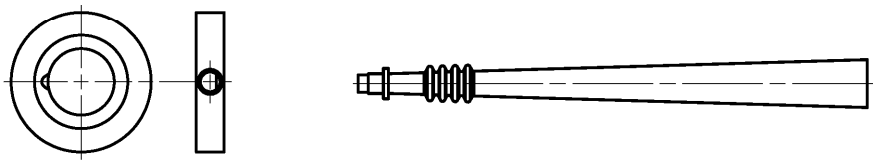

Reinforcing bar

Nominal diameter: ϕ8, ϕ10, ϕ12, ϕ14, ϕ16, ϕ20, ϕ25, ϕ28

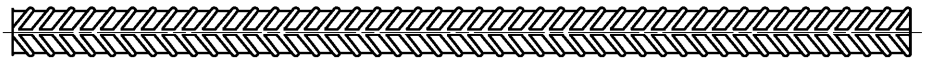

fischer rebar anchor FRA

Size: M12, M16, M20, M24

Figures not to scale

fischer injection system FIS V Plus

Product description
Overview system components part 2;
metal parts, injection adapter

Annex A 5

Electronic copy of the ETA by DIBt: ETA-20/0603

Table A6.1: Materials

Part	Designation	Material		
1	Injection cartridge	Mortar, hardener, filler		
	Steel grade	Steel	Stainless steel R	High corrosion resistant steel HCR
		zinc plated	acc. to EN 10088-1:2014 Corrosion resistance class CRC III acc. to EN 1993-1-4:2015	acc. to EN 10088-1:2014 Corrosion resistance class CRC V acc. to EN 1993-1-4:2015
2	Anchor rod	Property class 4.8, 5.8 or 8.8; EN ISO 898-1:2013 zinc plated ≥ 5 µm, ISO 4042:2018/Zn5/An(A2K) or hot dip galvanised ≥ 40 µm EN ISO 10684:2004 f_{uk} ≤ 1000 N/mm² A_5 > 12% fracture elongation	Property class 50, 70 or 80 EN ISO 3506-1:2009 1.4401; 1.4404; 1.4578; 1.4571; 1.4439; 1.4362; 1.4062, 1.4662, 1.4462; EN 10088-1:2014 f_{uk} ≤ 1000 N/mm² A_5 > 12% fracture elongation	Property class 50 or 80 EN ISO 3506-1:2009 or property class 70 with f_{yk}= 560 N/mm² 1.4565; 1.4529; EN 10088-1:2014 f_{uk} ≤ 1000 N/mm² A_5 > 12% fracture elongation
		Fracture elongation A_5 > 8 %, for applications without requirements for seismic performance category C2		
3	Washer ISO 7089:2000	zinc plated ≥ 5 µm, ISO 4042:2018/Zn5/An(A2K) or hot dip galvanised ≥ 40 µm EN ISO 10684:2004	1.4401; 1.4404; 1.4578; 1.4571; 1.4439; 1.4362; EN 10088-1:2014	1.4565; 1.4529; EN 10088-1:2014
4	Hexagon nut	Property class 4, 5 or 8; EN ISO 898-2:2012 zinc plated ≥ 5 µm, ISO 4042:2018/Zn5/An(A2K) or hot dip galvanised ≥ 40 µm EN ISO 10684:2004	Property class 50, 70 or 80 EN ISO 3506-1:2009 1.4401; 1.4404; 1.4578; 1.4571; 1.4439; 1.4362; EN 10088-1:2014	Property class 50, 70 or 80 EN ISO 3506-1:2009 1.4565; 1.4529; EN 10088-1:2014
5	fischer internal threaded anchor RG MI	Property class 5.8 ISO 898-1:2013 zinc plated ≥ 5 µm, ISO 4042:2018/Zn5/An(A2K)	Property class 70 EN ISO 3506-1:2009 1.4401; 1.4404; 1.4578; 1.4571; 1.4439; 1.4362; EN 10088-1:2014	Property class 70 EN ISO 3506-1:2009 1.4565; 1.4529; EN 10088-1:2014
6	Commercial standard screw or threaded rod for fischer internal threaded anchor RG MI	Property class 5.8 or 8.8; EN ISO 898-1:2013 zinc plated ≥ 5 µm, ISO 4042:2018/Zn5/An(A2K) A_5 > 8 % fracture elongation	Property class 70 EN ISO 3506-1:2009 1.4401; 1.4404; 1.4578; 1.4571; 1.4439; 1.4362; EN 10088-1:2014 A_5 > 8 % fracture elongation	Property class 70 EN ISO 3506-1:2009 1.4565; 1.4529; EN 10088-1:2014 A_5 > 8 % fracture elongation
7	fischer filling disc similar to DIN 6319-G	zinc plated ≥ 5 µm, ISO 4042:2018/Zn5/An(A2K) or hot dip galvanised ≥ 40 µm EN ISO 10684:2004	1.4401; 1.4404; 1.4578; 1.4571; 1.4439; 1.4362; EN 10088-1:2014	1.4565;1.4529; EN 10088-1:2014
8	Reinforcing bar EN 1992-1-1:2004 and AC:2010, Annex C	Bars and de-coiled rods, class B or C with f_{yk} and k according to NDP or NCL of according to EN 1992-1-1:2004/NA $f_{uk} = f_{tk} = k \cdot f_{yk}$		
9	fischer rebar anchor FRA	Rebar part: Bars and de-coiled rods class B or C with f_{yk} and k according to NDP or NCL of EN 1992-1-1:2004+AC:2010 $f_{uk} = f_{tk} = k \cdot f_{yk}$	Threaded part: Property class 70 or 80 EN ISO 3506-1:2009 1.4401, 1.4404, 1.4571, 1.4578, 1.4439, 1.4362, 1.4062 acc. to EN 10088-1:2014 Corrosion resistance class CRC III acc. to EN 1993-1-4:2015 1.4565; 1.4529 acc. to EN 10088-1:2014 Corrosion resistance class CRC V acc. to EN 1993-1-4:2015	

fischer injection system FIS V Plus

Product description
Materials

Annex A 6

Electronic copy of the ETA by DIBt: ETA-20/0603

Specifications of intended use (part 1)

Table B1.1: Overview use and performance categories

		FIS V Plus with …							
		Anchor rod		fischer internal threaded anchor RG MI		Reinforcing bar		fischer rebar anchor FRA	
Hammer drilling with standard drill bit		all sizes							
Hammer drilling with hollow drill bit (fischer „FHD“, Heller „Duster Expert“; Bosch „Speed Clean“; Hilti „TE-CD, TE-YD“, DreBo „D-Plus“, DreBo „D-Max“		Nominal drill bit diameter (d_0) 12 mm to 35 mm							
Static and quasi static load, in	uncracked concrete	all sizes	Tables: C1.1 C4.1 C5.1 C6.1 C10.1	all sizes	Tables: C2.1 C4.1 C7.1 C10.2	all sizes	Tables: C3.1 C4.1 C8.1 C11.1	all sizes	Tables: C3.2 C4.1 C9.1 C11.2
	cracked concrete	M8 to M30		-[2]		ϕ 10 to ϕ 28			
Seismic performance category	C1[1]	M10 to M30	Tables: C12.1 C13.1 C14.1	-[2]		-[2]		-[2]	
	C2[1]	M12 M16 M20	Tables: C12.1 C13.1 C15.1						
Use category	I1 dry or wet concrete	all sizes							
	I2 water filled hole	M12 to M30		all sizes		-[2]		-[2]	
Installation direction		D3 (downward and horizontal and upwards (e.g. overhead) installation)							
Installation temperature		$T_{i,min}$ = -10 °C to $T_{i,max}$ = +40 °C							
In-service temperature	Temperature range I	-40 °C to +80 °C	(max. short term temperature +80 °C; max. long term temperature +50 °C)						
	Temperature range II	-40 °C to +120 °C	(max. short term temperature +120 °C; max. long term temperature +72 °C)						

[1] Not for FIS VW Plus High Speed and FIS VS Plus Low Speed
[2] No performance assessed

Electronic copy of the ETA by DIBt: ETA-20/0603

Specifications of intended use (part 2)

Base materials:

- Compacted reinforced or unreinforced normal weight concrete without fibres of strength classes C20/25 to C50/60 according to EN 206:2013+A1:2016

Use conditions (Environmental conditions):

- Structures subject to dry internal conditions
  (zinc coated steel, stainless steel or high corrosion resistant steel).
- For all other conditions according to EN1993-1-4:2015 corresponding to corrosion resistance classes to Annex A 6 Table A6.1.

Design:

- Anchorages have to be designed by a responsible engineer with experience of concrete anchor design.
- Verifiable calculation notes and drawings are to be prepared taking account of the loads to be anchored. The position of the anchor is indicated on the design drawings (e. g. position of the anchor relative to reinforcement or to supports, etc.).
- Anchorages are designed in accordance with:
  EN 1992-4:2018 and EOTA Technical Report TR 055, Edition February 2018.

Installation:

- Anchor installation is to be carried out by appropriately qualified personnel and under the supervision of the person responsible for technical matters of the site
- In case of aborted hole: The hole shall be filled with mortar
- Anchorage depth should be marked and adhered to on installation
- Overhead installation is allowed

Electronic copy of the ETA by DIBt: ETA-20/0603

Table B3.1: Installation parameters for **anchor rods** [1)]

Anchor rods			**Thread**	**M6**	**M8**	**M10**	**M12**	**M16**	**M20**	**M24**	**M27**	**M30**
Width across flats		SW	[mm]	10	13	17	19	24	30	36	41	46
Nominal drill hole diameter		d_0		8	10	12	14	18	24	28	30	35
Drill hole depth		h_0		$h_0 = h_{ef}$								
Effective embedment depth		$h_{ef,\,min}$		50	60	60	70	80	90	96	108	120
		$h_{ef,\,max}$		72	160	200	240	320	400	480	540	600
Minimum spacing and minimum edge distance		s_{min} = c_{min}		40	40	45	55	65	85	105	125	140
Diameter of the clearance hole of the fixture	pre-positioned installation	d_f		7	9	12	14	18	22	26	30	33
	push through installation	d_f		9	12	14	16	20	26	30	33	40
Minimum thickness of concrete member		h_{min}		h_{ef} + 30 (≥100)				$h_{ef} + 2d_0$				
Maximum installation torque		max T_{inst}	[Nm]	5	10	20	40	60	120	150	200	300

[1)] minimum spacing and minimum edge distance see Annex B 4

fischer anchor rod

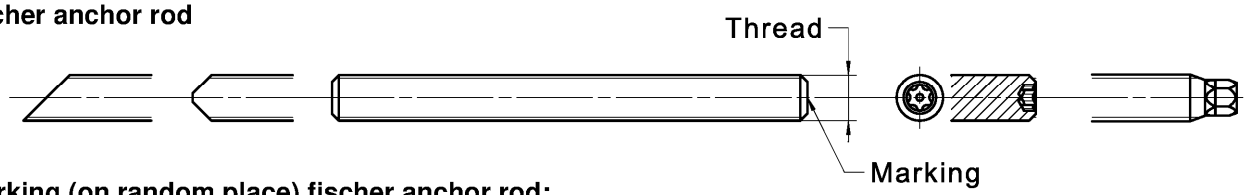

Marking (on random place) fischer anchor rod:

Steel zinc plated PC[1)] 8.8	• or +	Steel hot-dip PC[1)] 8.8	•
High corrosion resistant steel HCR PC[1)] 50	•	High corrosion resistant steel HCR PC[1)] 70	-
High corrosion resistant steel HCR PC[1)] 80	(	Stainless steel R property class 50	~
Stainless steel R property class 80	∗		

Alternatively: Colour coding according to DIN 976-1: 2016 — [1)] PC = property class

Installation conditions:

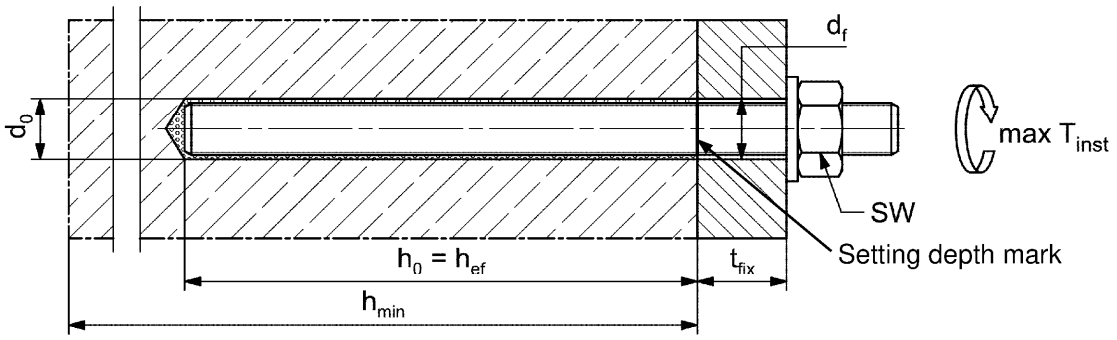

Commercial standard threaded rods, washers and hexagon nuts may also be used if the following requirements are fulfilled:

- Materials, dimensions and mechanical properties according to Annex A 6, Table A6.1
- Inspection certificate 3.1 according to EN 10204:2004, the documents have to be stored
- Setting depth is marked

Figures not to scale

fischer injection system FIS V Plus

Intended use
Installation parameters anchor rods

Annex B 3

Electronic copy of the ETA by DIBt: ETA-20/0603

Table B4.1: Minimum spacing and minimum edge distance for **anchor rods**, **reinforcing bars** and **fischer rebar anchor FRA**

Anchor rods			**M6**	**M8**	**M10**	**M12**	**-**	**M16**
Reinforcing bars / FRA (nominal diameter)		**ϕ**	**-**	**8**	**10**	**12**	**14**	**16**
Minimum edge distance								
Uncracked / cracked concrete	c_{min}	[mm]	40	40	45	45	45	50
Minimum spacing	s_{min}	[mm]	according to Annex B 5					
Minimum spacing								
Uncracked / cracked concrete	s_{min}	[mm]	40	40	45	55	60	65
Minimum edge distance	c_{min}	[mm]	according to Annex B 5					
Required projecting area								
Uncracked concrete	$A_{sp,req}$	[1000 mm²]	8,0	8,0	13,0	22,0	23,0	24,0
Cracked concrete	$A_{sp,req}$	[1000 mm²]	6,5	6,5	10	16,5	17,5	18,5

Anchor rods			**M20**	**M24**	**-**	**M27**	**-**	**M30**
Reinforcing bars / FRA (nominal diameter)		**ϕ**	**20**	**-**	**25**	**-**	**28**	**-**
Minimum edge distance								
Uncracked / cracked concrete	c_{min}	[mm]	55	60	75	75	80	80
Minimum spacing	s_{min}	[mm]	according to Annex B 5					
Minimum spacing								
Uncracked / cracked concrete	s_{min}	[mm]	85	105	120	120	140	140
Minimum edge distance	c_{min}	[mm]	according to Annex B 5					
Required projecting area								
Uncracked concrete	$A_{sp,req}$	[1000 mm²]	38,5	40	47,5	47,5	64	64
Cracked concrete	$A_{sp,req}$	[1000 mm²]	29,5	30,5	36,5	36,5	49	49

Splitting failure for minimum edge distance and spacing in dependence of the effective embedment depth h_{ef}.

For the calculation of minimum spacing and minimum edge distance of anchors in combination with different embedment depths and thicknesses of concrete members the following equation shall be fulfilled:

$$\mathbf{A_{sp,req} < A_{sp,t}}$$

$A_{sp,req}$ = required projecting area
$A_{sp,t}$ = $A_{sp,ef}$ = effective projecting area (according to Annex B 5)

fischer injection system FIS V Plus

Intended use
Minimum spacing and edge distance for anchor rods, reinforcing bars and fischer rebar anchor FRA

Annex B 4

Electronic copy of the ETA by DIBt: ETA-20/0603

Table B5.1: Effective projecting area $A_{sp,t}$ with concrete member thickness $h > h_{ef} + 1{,}5 \cdot c$ and $h \geq h_{min}$

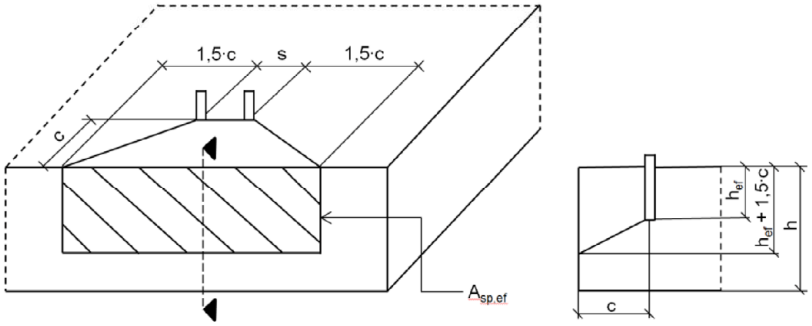

Single anchor		$A_{sp,t} = (3 \cdot c) \cdot (h_{ef} + 1{,}5 \cdot c)$	[mm²]	with $c \geq c_{min}$
Group of anchors with	$s > 3 \cdot c$	$A_{sp,t} = (6 \cdot c) \cdot (h_{ef} + 1{,}5 \cdot c)$	[mm²]	
Group of anchors with	$s \leq 3 \cdot c$	$A_{sp,t} = (3 \cdot c + s) \cdot (h_{ef} + 1{,}5 \cdot c)$	[mm²]	with $c \geq c_{min}$ and $s \geq s_{min}$

Table B5.2: Effektive projecting area $A_{sp,t}$ with concrete member thickness $h \leq h_{ef} + 1{,}5 \cdot c$ and $h \geq h_{min}$

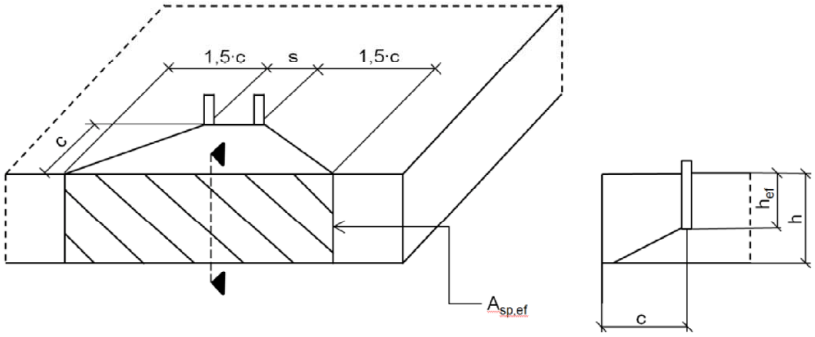

Single anchor		$A_{sp,t} = 3 \cdot c \cdot$ existing h	[mm²]	with $c \geq c_{min}$
Group of anchors with	$s > 3 \cdot c$	$A_{sp,t} = 6 \cdot c \cdot$ existing h	[mm²]	
Group of anchors with	$s \leq 3 \cdot c$	$A_{sp,t} = (3 \cdot c + s) \cdot$ existing h	[mm²]	with $c \geq c_{min}$ and $s \geq s_{min}$

Edge distance and axial spacing shall be rounded up to at least 5 mm

Figures not to scale

fischer injection system FIS V Plus

Intended use
Minimum thickness of concrete member for anchor rods and reinforcing bars, minimum spacing and edge distance

Annex B 5

Electronic copy of the ETA by DIBt: ETA-20/0603

Table B6.1: Installation parameters for **fischer internal threaded anchors RG MI**

Internal threaded anchors RG MI	**Thread**		**M8**	**M10**	**M12**	**M16**	**M20**
Diameter of anchor	$d_{nom} = d_H$		12	16	18	22	28
Nominal drill hole diameter	d_0		14	18	20	24	32
Drill hole depth	h_0		$h_0 = h_{ef} = L_H$				
Effective embedment depth ($h_{ef} = L_H$)	h_{ef}		90	90	125	160	200
Minimum spacing and minimum edge distance	s_{min} = c_{min}	[mm]	55	65	75	95	125
Diameter of clearance hole in the fixture	d_f		9	12	14	18	22
Minimum thickness of concrete member	h_{min}		120	125	165	205	260
Maximum screw-in depth	$l_{E,max}$		18	23	26	35	45
Minimum screw-in depth	$l_{E,min}$		8	10	12	16	20
Maximum installation torque	max T_{inst}	[Nm]	10	20	40	80	120

fischer internal threaded anchor RG MI

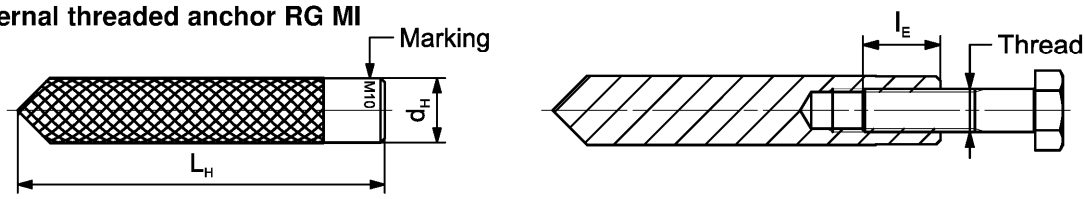

Marking: Anchor size e. g.: **M10**
Stainless steel → additional **R**; e.g.: **M10 R**
High corrosion resistant steel → additional **HCR**; e.g.: **M10 HCR**

Retaining bolt or threaded rods (including nut and washer) must comply with the appropriate material and strength class of Annex A 6, Table A6.1

Installation conditions:

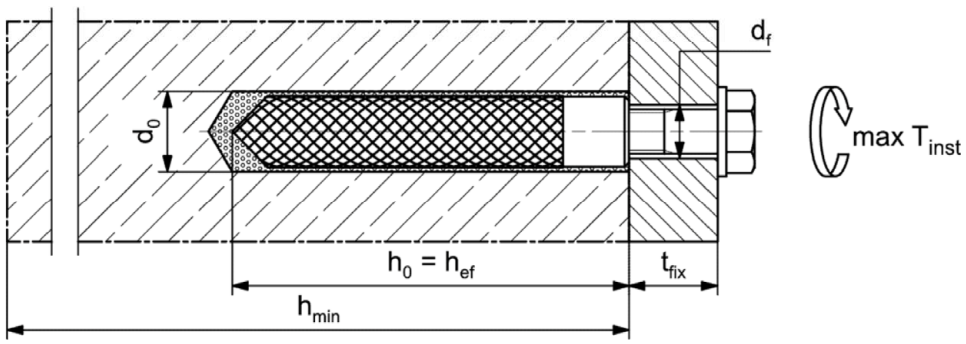

Figures not to scale

fischer injection system FIS V Plus

Intended use
Installation parameters internal threaded anchors RG MI

Annex B 6

Electronic copy of the ETA by DIBt: ETA-20/0603

Table B7.1: Installation parameters for **reinforcing bars** [1)]

Nominal diameter of the bar		**ϕ**	**8**[2)]		**10**[2)]		**12**[2)]		**14**	**16**	**20**	**25**	**28**
Nominal drill hole diameter	d_0	[mm]	10	12	12	14	14	16	18	20	25	30	35
Drill hole depth	h_0		$h_0 = h_{ef}$										
Effective embedment depth	$h_{ef,min}$		60		60		70		75	80	90	100	112
	$h_{ef,max}$		160		200		240		280	320	400	500	560
Minimum spacing and minimum edge distance	s_{min} = c_{min}		40		45		55		60	65	85	110	130
Minimum thickness of concrete member	h_{min}		h_{ef} + 30 (≥ 100)					$h_{ef} + 2d_0$					

[1)] minimum spacing and minimum edge distance see Annex B 4
[2)] Both drill hole diameters can be used

Reinforcing bar

- The minimum value of related rib area $f_{R,min}$ must fulfil the requirements of EN 1992-1-1:2004+AC:2010
- The rib height must be within the range: $0{,}05 \cdot \phi \leq h_{rib} \leq 0{,}07 \cdot \phi$
  (ϕ = Nominal diameter of the bar, h_{rib} = rib height)

Installation conditions:

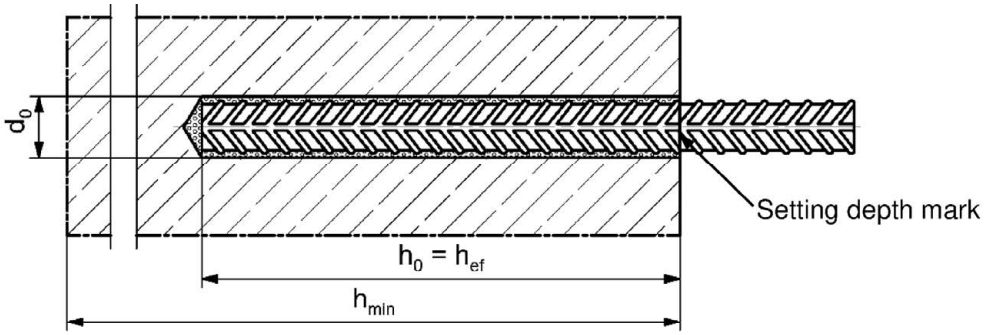

Figures not to scale

fischer injection system FIS V Plus

Intended use
Installation parameters reinforcing bars

Annex B 7

Electronic copy of the ETA by DIBt: ETA-20/0603

Table B8.1: Installation parameters for **fischer rebar anchor FRA** [1)]

Rebar anchor FRA		**Thread**	**M12**[2)]		**M16**	**M20**	**M24**
Nominal diameter of the bar	ϕ	[mm]	12		16	20	25
Width across flats	SW	[mm]	19		24	30	36
Nominal drill hole diameter	d_0	[mm]	14	16	20	25	30
Drill hole depth	h_0	[mm]	$h_{ef} + l_e$				
Effective embedment depth	$h_{ef,min}$	[mm]	70		80	90	96
	$h_{ef,max}$	[mm]	140		220	300	380
Distance concrete surface to welded joint	l_e	[mm]	100				
Minimum spacing and minimum edge distance	s_{min} = c_{min}	[mm]	55		65	85	105
Diameter of clearance hole in the fixture – pre-positioned anchorage	$\leq d_f$	[mm]	14		18	22	26
Diameter of clearance hole in the fixture – push through anchorage	$\leq d_f$	[mm]	18		22	26	32
Minimum thickness of concrete member	h_{min}	[mm]	$h_0 + 30$	$h_0 + 2d_0$			
Maximum installation torque	max T_{inst}	[Nm]	40		60	120	150

[1)] minimum spacing and minimum edge distance see Annex B 5
[2)] Both drill hole diameters can be used

fischer rebar anchor FRA

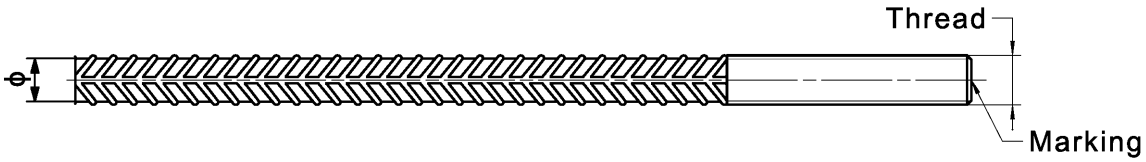

Marking frontal e.g: FRA (for stainless steel); FRA HCR (for high corrosion resistant steel)

Installation conditions:

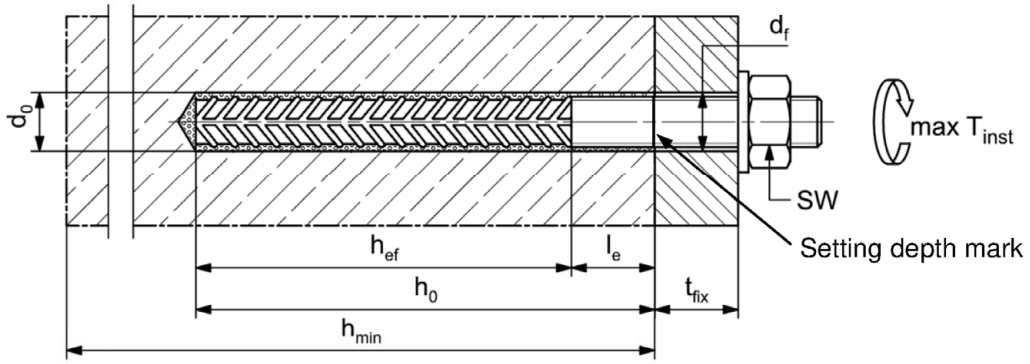

Figures not to scale

fischer injection system FIS V Plus

Intended use
Installation parameters rebar anchor FRA

Annex B 8

Electronic copy of the ETA by DIBt: ETA-20/0603

Table B9.1: Parameters of the **cleaning brush** BS (steel brush with steel bristles)

The size of the cleaning brush refers to the drill hole diameter

Nominal drill hole diameter	d_0	[mm]	8	10	12	14	16	18	20	24	25	28	30	35
Steel brush diameter	d_b		9	11	14	16	20		25	26	27	30	40	

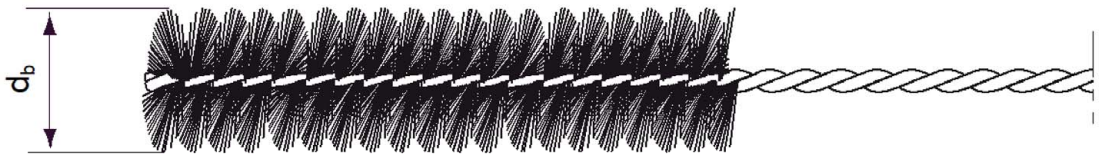

Table B9.2 **Maximum processing** time of the mortar and **minimum curing** time (During the curing time of the mortar the concrete temperature may not fall below the listed minimum temperature)

Temperature at anchoring base [°C]	Maximum processing time t_{work}			Minimum curing time [1] t_{cure}		
	FIS VW Plus High Speed	FIS V Plus	FIS VS Plus Low Speed	FIS VW Plus High Speed	FIS V Plus	FIS VS Plus Low Speed
-10 to -5 [2]	-	-	-	12 h	-	-
> -5 to 0 [2]	5 min	-	-	3 h	24 h	-
> 0 to 5 [2]	5 min	13 min	-	3 h	3 h	6 h
> 5 to 10	3 min	9 min	20 min	50 min	90 min	3 h
> 10 to 20	1 min	5 min	10 min	30 min	60 min	2 h
> 20 to 30	-	4 min	6 min	-	45 min	60 min
> 30 to 40	-	2 min	4 min	-	35 min	30 min

[1] In wet concrete or water filled holes the curing times must be doubled
[2] Minimal cartridge temperature +5°C

Electronic copy of the ETA by DIBt: ETA-20/0603

fischer injection system FIS V Plus

Intended use
Cleaning brush (steel brush)
Processing time and curing time

Annex B 9

Installation instructions part 1

Drilling and cleaning the hole (hammer drilling with standard drill bit)

1	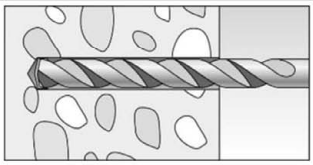	Drill the hole. Nominal drill hole diameter $\mathbf{d_0}$ and drill hole depth $\mathbf{h_0}$ see **tables B3.1, B6.1, B7.1, B8.1**		
2	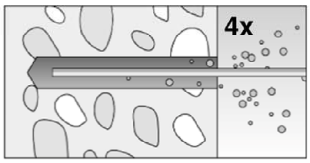	Clean the drill hole: For $h_{ef} \leq 12d$ and $d_0 < 18$ mm blow out the hole four times by hand	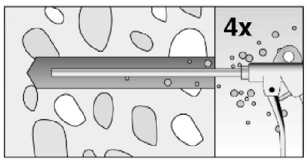	For $h_{ef} > 12d$ and / or $d_0 \geq 18$ mm blow out the hole four times with oil-free compressed air ($p \geq 6$ bar)
3	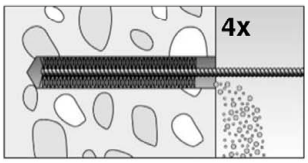	Brush the drill hole four times. For drill hole diameter ≥ 30 mm use a power drill. For deep holes use an extension. Corresponding brushes see **table B9.1**		
4	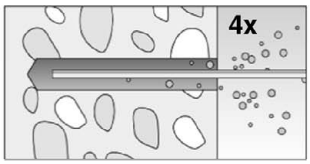	Clean the drill hole: For $h_{ef} \leq 12d$ and $d_0 < 18$ mm blow out the hole four times by hand	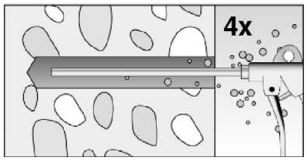	For $h_{ef} > 12d$ and / or $d_0 \geq 18$ mm blow out the hole four times with oil-free compressed air ($p \geq 6$ bar)

Go to step 5

Drilling and cleaning the hole (hammer drilling with hollow drill bit)

1		Check a suitable hollow drill (see **table B1.1**) for correct operation of the dust extraction
2	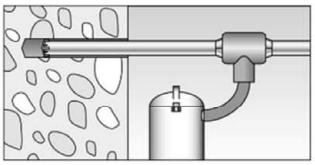	Use a suitable dust extraction system, e.g. fischer FVC 35 M or a comparable dust extraction system with equivalent performance data Drill the hole with hollow drill bit. The dust extraction system has to extract the drill dust nonstop during the drilling process and must be adjusted to maximum power. Nominal drill hole diameter $\mathbf{d_0}$ and drill hole depth $\mathbf{h_0}$ see **tables B3.1, B6.1, B7.1, B8.1**

Go to step 5

fischer injection system FIS V Plus	**Annex B 10**
Intended use Installation instructions part 1	

Electronic copy of the ETA by DIBt: ETA-20/0603

Installation instructions part 2

Preparing the cartridge

5	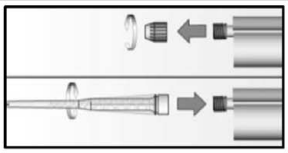	Remove the sealing cap Screw on the static mixer (the spiral in the static mixer must be clearly visible)
6	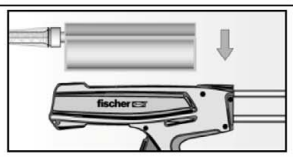 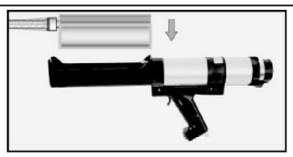	Place the cartridge into the dispenser
7	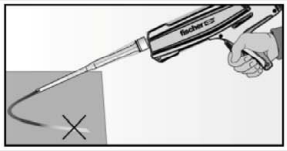 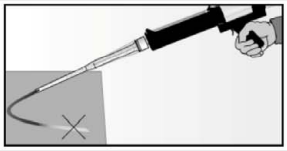	Extrude approximately 10 cm of material out until the resin is evenly grey in colour. Do not use mortar that is not uniformly grey

Go to step 8

Injection of the mortar

8	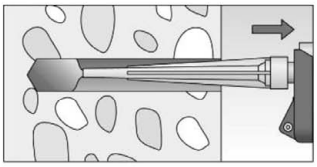 Fill approximately 2/3 of the drill hole with mortar. Always begin from the bottom of the hole and avoid bubbles	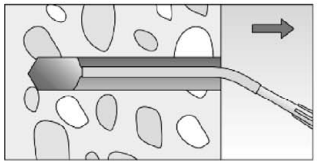 For drill hole depth ≥ 150 mm use an extension tube	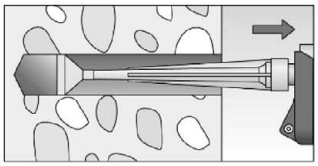 For overhead installation, deep holes (h_0 > 250 mm) or drill hole diameter (d_0 ≥ 40 mm) use an injection adapter

Go to step 9

fischer injection system FIS V Plus	**Annex B 11**
Intended use Installation instructions part 2	

Electronic copy of the ETA by DIBt: ETA-20/0603

Installation instructions part 3

Installation of anchor rods or fischer internal threaded anchors RG MI

9

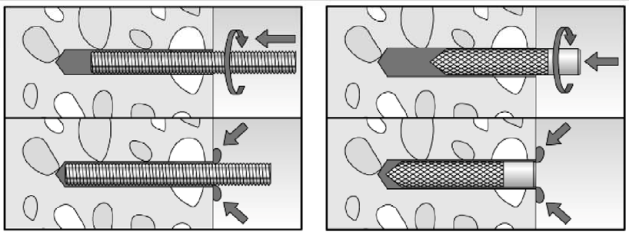

Only use clean and oil-free metal parts.
Mark the setting depth of the metal part. Push the anchor rod or fischer internal threaded RG MI anchor down to the bottom of the hole, turning it slightly while doing so.
After inserting the metal parts, excess mortar must be emerged around the anchor element.

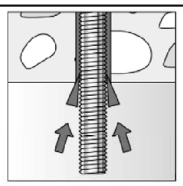

For overhead installations support the metal part with wedges (e.g. fischer centering wedges) or fischer overhead clips.

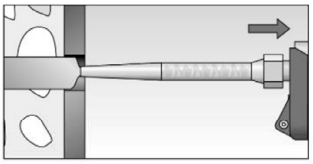

For push through installation fill the annular gap with mortar

10

Wait for the specified curing time t_{cure}
see **table B9.2**

11

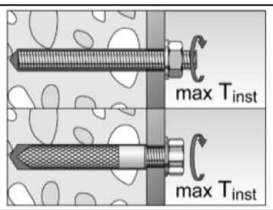

Mounting the fixture
max T_{inst} see **tables B3.1 and B6.1**

Option

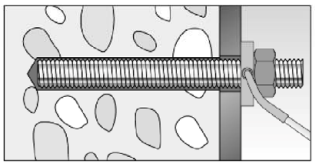

After the minimum curing time is reached, the gap between metal part and fixture (annular clearance) may be filled with mortar via the fischer filling disc.
Compressive strength ≥ 50 N/mm² (e.g. fischer injection mortars FIS HB, FIS SB, FIS V, FIS V Plus, FIS EM Plus).
ATTENTION: Using fischer filling disc reduces t_{fix} (usable length of the anchor)

Installation reinforcing bars and fischer rebar anchor FRA

9

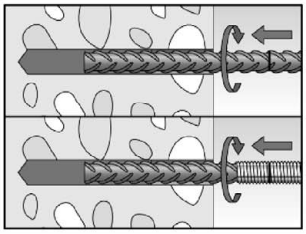

Only use clean and oil-free reinforcing bars or fischer FRA. Mark the setting depth. Turn while using force to push the reinforcement bar or the fischer FRA into the filled hole up to the setting depth mark.

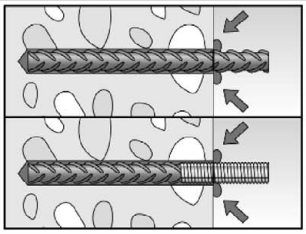

When the setting depth mark is reached, excess mortar must be emerged from the mouth of the drill hole.

10

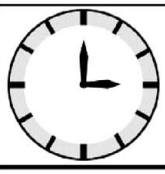

Wait for the specified curing time t_{cure} see **table B9.2**

11

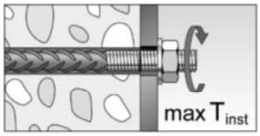

Mounting the fixture
max T_{inst}
see **table B8.1**

fischer injection system FIS V Plus

Intended use
Installation instructions part 3

Annex B 12

Electronic copy of the ETA by DIBt: ETA-20/0603

Table C1.1: Characteristic values for steel failure under tension / shear load of **fischer anchor rods** and **standard threaded rods**

Anchor rod / standard threaded rod				M6	M8	M10	M12	M16	M20	M24	M27	M30
Bearing capacity under tension load, steel failure [3]												
Characteristic resistance $N_{Rk,s}$	Steel zinc plated	Property class 4.8	[kN]	8	15(13)	23(21)	33	63	98	141	184	224
		5.8		10	19(17)	29(27)	43	79	123	177	230	281
		8.8		16	29(27)	47(43)	68	126	196	282	368	449
	Stainless steel R and high corrosion resistant steel HCR	50		10	19	29	43	79	123	177	230	281
		70		14	26	41	59	110	172	247	322	393
		80		16	30	47	68	126	196	282	368	449
Partial factors [1]												
Partial factor $\gamma_{Ms,N}$	Steel zinc plated	Property class 4.8	[-]	1,50								
		5.8		1,50								
		8.8		1,50								
	Stainless steel R and high corrosion resistant steel HCR	50		2,86								
		70		1,50[2] / 1,87								
		80		1,60								
Bearing capacity under shear load, steel failure [3]												
without lever arm												
Characteristic resistance $V^0_{Rk,s}$	Steel zinc plated	Property class 4.8	[kN]	4	9(8)	14(13)	20	38	59	85	110	135
		5.8		6	11(10)	17(16)	25	47	74	106	138	168
		8.8		8	15(13)	23(21)	34	63	98	141	184	225
	Stainless steel R and high corrosion resistant steel HCR	50		5	9	15	21	39	61	89	115	141
		70		7	13	20	30	55	86	124	161	197
		80		8	15	23	34	63	98	141	184	225
Ductility factor		k_7	[-]	1,0								
with lever arm												
Characteristic resistance $M^0_{Rk,s}$	Steel zinc plated	Property class 4.8	[Nm]	6	15(13)	30(27)	52	133	259	448	665	899
		5.8		7	19(16)	37(33)	65	166	324	560	833	1123
		8.8		12	30(26)	60(53)	105	266	519	896	1333	1797
	Stainless steel R and high corrosion resistant steel HCR	50		7	19	37	65	166	324	560	833	1123
		70		10	26	52	92	232	454	784	1167	1573
		80		12	30	60	105	266	519	896	1333	1797
Partial factors [1]												
Partial factor $\gamma_{Ms,V}$	Steel zinc plated	Property class 4.8	[-]	1,25								
		5.8		1,25								
		8.8		1,25								
	Stainless steel R and high corrosion resistant steel HCR	50		2,38								
		70		1,25[2] / 1,56								
		80		1,33								

[1] In absence of other national regulations
[2] Only admissible for high corrosion resist. steel HCR, with f_{yk} / f_{uk} ≥ 0,8 and A_5 > 12 % (e.g. fischer anchor rods)
[3] Values in brackets are valid for undersized threaded rods with smaller stress area A_s for hot dip galvanised standard threaded rods according to EN ISO 10684:2004+AC:2009

fischer injection system FIS V Plus

Performances
Characteristic values for steel failure under tension / shear load of fischer anchor rods and standard threaded rods

Annex C 1

Electronic copy of the ETA by DIBt: ETA-20/0603

Table C2.1: Characteristic values for steel failure under tension / shear load of **fischer internal threaded anchors RG MI**

fischer internal threaded anchors RG MI					M8	M10	M12	M16	M20
Bearing capacity under tension load, steel failure									
Charact. resistance with screw	$N_{Rk,s}$	Property class	5.8	[kN]	19	29	43	79	123
			8.8		29	47	68	108	179
		Property class 70	R		26	41	59	110	172
			HCR		26	41	59	110	172
Partial factors[1)]									
Partial factors	$\gamma_{Ms,N}$	Property class	5.8	[-]	1,50				
			8.8		1,50				
		Property class 70	R		1,87				
			HCR		1,87				
Bearing capacity under shear load, steel failure									
Without lever arm									
Charact. resistance with screw	$V^0_{Rk,s}$	Property class	5.8	[kN]	9,2	14,5	21,1	39,2	62,0
			8.8		14,6	23,2	33,7	54,0	90,0
		Property class 70	R		12,8	20,3	29,5	54,8	86,0
			HCR		12,8	20,3	29,5	54,8	86,0
Ductility factor			k_7	[-]	1,0				
With lever arm									
Charact. resistance with screw	$M^0_{Rk,s}$	Property class	5.8	[Nm]	20	39	68	173	337
			8.8		30	60	105	266	519
		Property class 70	R		26	52	92	232	454
			HCR		26	52	92	232	454
Partial factors[1)]									
Partial factors	$\gamma_{Ms,V}$	Property class	5.8	[-]	1,25				
			8.8		1,25				
		Property class 70	R		1,56				
			HCR		1,56				

[1)] In absence of other national regulations

Electronic copy of the ETA by DIBt: ETA-20/0603

Table C3.1: Characteristic values for steel failure under tension / shear load of **reinforcing bars**

Nominal diameter of the bar		**ϕ**	**8**	**10**	**12**	**14**	**16**	**20**	**25**	**28**
Bearing capacity under tension load, steel failure										
Characteristic resistance	$N_{Rk,s}$	[kN]	$A_s \cdot f_{uk}$ [1)]							
Bearing capacity under shear load, steel failure										
Without lever arm										
Characteristic resistance	$V^0_{Rk,s}$	[kN]	$0{,}5 \cdot A_s \cdot f_{uk}$ [1)]							
Ductility factor	k_7	[-]	1,0							
With lever arm										
Characteristic resistance	$M^0_{Rk,s}$	[Nm]	$1{,}2 \cdot W_{el} \cdot f_{uk}$ [1)]							

[1)] f_{uk} or f_{yk} respectively must be taken from the specifications of the reinforcing bar

Table C3.2: Characteristic values for steel failure under tension / shear load of **fischer rebar anchors FRA**

fischer rebar anchor FRA			**M12**	**M16**	**M20**	**M24**
Bearing capacity under tension load, steel failure						
Characteristic resistance	$N_{Rk,s}$	[kN]	63	111	173	270
Partial factor[1)]						
Partial factor	$\gamma_{Ms,N}$	[-]	1,4			
Bearing capacity under shear load, steel failure						
Without lever arm						
Characteristic resistance	$V^0_{Rk,s}$	[kN]	30	55	86	124
Ductility factor	k_7	[-]	1,0			
With lever arm						
Characteristic resistance	$M^0_{Rk,s}$	[Nm]	92	233	454	785
Partial factor[1)]						
Partial factor	$\gamma_{Ms,V}$	[-]	1,56			

[1)] In absence of other national regulations

Electronic copy of the ETA by DIBt: ETA-20/0603

Table C4.1: Characteristic values for concrete failure under tension / shear load

Size				**All sizes**	
Tension load					
Installation factor		γ_{inst}	[-]	See annex C 5 to C 12 and C 17 to C18	
Factors for the compressive strength of concrete > C20/25					
Increasing factor for τ_{Rk}	C25/30	Ψ_c	[-]	1,05	
	C30/37			1,10	
	C35/45			1,15	
	C40/50			1,19	
	C45/55			1,22	
	C50/60			1,26	
Splitting failure					
Edge distance	$h / h_{ef} \geq 2{,}0$	$c_{cr,sp}$	[mm]	$1{,}0\ h_{ef}$	
	$2{,}0 > h / h_{ef} > 1{,}3$			$4{,}6\ h_{ef} - 1{,}8\ h$	
	$h / h_{ef} \leq 1{,}3$			$2{,}26\ h_{ef}$	
Spacing		$s_{cr,sp}$		$2\ c_{cr,sp}$	
Concrete failure					
Uncracked concrete		$k_{ucr,N}$	[-]	11,0	
Cracked concrete		$k_{cr,N}$		7,7	
Edge distance		$c_{cr,N}$	[mm]	$1{,}5\ h_{ef}$	
Spacing		$s_{cr,N}$		$2\ c_{cr,N}$	
Factors for sustained tension load					
Temperature range			[-]	50 °C / 80 °C	72 °C / 120 °C
Factor		Ψ^0_{sus}	[-]	0,76	0,78
Shear load					
Installation factor		γ_{inst}	[-]	1,0	
Concrete pry-out failure					
Factor for pry-out failure		k_8	[-]	2,0	
Concrete edge failure					
Effective length of fastener in shear loading		l_f	[mm]	for $d_{nom} \leq 24$ mm: min (h_{ef}; 12 d_{nom}) for $d_{nom} > 24$ mm: min (h_{ef}; 8 d_{nom}; 300 mm)	

Calculation diameters											
Size			M6	M8	M10	M12	M16	M20	M24	M27	M30
fischer anchor rods and standard threaded rods		d_{nom}	[mm]	6	8	10	12	16	20	24	27	30
fischer internal threaded anchors RG MI		d_{nom}	[mm]	-[1)]	12	16	18	22	28	-[1)]	-[1)]	-[1)]
fischer rebar anchor FRA		d_{nom}	[mm]	-[1)]	-[1)]	-[1)]	12	16	20	25	-[1)]	-[1)]
Size (nominal diameter of the bar)			ϕ	8	10	12	14	16	20	25	28
Reinforcing bar		d_{nom}	[mm]	8	10	12	14	16	20	25	28

[1)] Size of anchor type not part of the assessment

fischer injection system FIS V Plus

Performances
Characteristic values for concrete failure under tension / shear load

Annex C 4

Electronic copy of the ETA by DIBt: ETA-20/0603

Table C5.1: Characteristic values for combined pull-out and concrete failure for **fischer anchor rods** and **standard threaded rods** in hammer drilled holes; **uncracked or cracked concrete; working life 50 years**

Anchor rod / standard threaded rod				**M6**	**M8**	**M10**	**M12**	**M16**	**M20**	**M24**	**M27**	**M30**
Combined pullout and concrete cone failure												
Calculation diameter		d	[mm]	6	8	10	12	16	20	24	27	30
Uncracked concrete												
Characteristic bond resistance in uncracked concrete C20/25												
Hammer-drilling with standard drill bit or hollow drill bit (dry or wet concrete)												
Temperature range	I: 50 °C / 80 °C	$\tau_{Rk,ucr}$	[N/mm²]	9,0	16,0	16,0	15,0	14,0	12,0	11,0	10,0	9,0
	II: 72 °C / 120 °C			6,5	15,0	14,0	13,0	12,0	11,0	9,0	8,0	8,0
Hammer-drilling with standard drill bit or hollow drill bit (water filled hole)												
Temperature range	I: 50 °C / 80 °C	$\tau_{Rk,ucr}$	[N/mm²]	-[1)]	-[1)]	-[1)]	9,5	8,5	8,0	7,5	7,0	7,0
	II: 72 °C / 120 °C			-[1)]	-[1)]	-[1)]	7,5	7,0	6,5	6,0	6,0	6,0
Installation factors												
Dry or wet concrete		γ_{inst}	[-]	1,0								
Water filled hole				-[1)]	-[1)]	-[1)]	1,2					
Cracked concrete												
Characteristic bond resistance in cracked concrete C20/25												
Hammer-drilling with standard drill bit or hollow drill bit (dry or wet concrete)												
Temperature range	I: 50 °C / 80 °C	$\tau_{Rk,cr}$	[N/mm²]	-[1)]	5,5	6,0	6,5	6,0	5,5	5,0	5,0	4,5
	II: 72 °C / 120 °C			-[1)]	4,5	5,0	6,0	5,5	5,0	4,5	4,0	4,0
Hammer-drilling with standard drill bit or hollow drill bit (water filled hole)												
Temperature range	I: 50 °C / 80 °C	$\tau_{Rk,cr}$	[N/mm²]	-[1)]	-[1)]	-[1)]	5,0	5,0	4,5	4,0	3,5	3,5
	II: 72 °C / 120 °C			-[1)]	-[1)]	-[1)]	4,0	4,0	4,0	3,5	3,0	3,0
Installation factors												
Dry or wet concrete		γ_{inst}	[-]	1,0								
Water filled hole				-[1)]	-[1)]	-[1)]	1,2					

[1)] No performance assessed

Electronic copy of the ETA by DIBt: ETA-20/0603

Table C6.1: Characteristic values for combined pull-out and concrete failure for **fischer anchor rods** and **standard threaded rods** in hammer drilled holes; **uncracked or cracked concrete; working life 100 years**

Anchor rod / standard threaded rod				**M6**	**M8**	**M10**	**M12**	**M16**	**M20**	**M24**	**M27**	**M30**
Combined pullout and concrete cone failure												
Calculation diameter		d	[mm]	6	8	10	12	16	20	24	27	30
Uncracked concrete												
Characteristic bond resistance in uncracked concrete C20/25												
Hammer-drilling with standard drill bit or hollow drill bit (dry or wet concrete)												
Temperature range	I: 50 °C / 80 °C	$\tau_{Rk,100,ucr}$	[N/mm²]	-[1]	16,0	16,0	15,0	14,0	12,0	11,0	10,0	9,0
	II: 72 °C / 120 °C			-[1]	15,0	14,0	13,0	12,0	11,0	9,0	8,0	8,0
Hammer-drilling with standard drill bit or hollow drill bit (water filled hole)												
Temperature range	I: 50 °C / 80 °C	$\tau_{Rk,100,ucr}$	[N/mm²]	-[1]	-[1]	-[1]	9,5	8,5	8,0	7,5	7,0	7,0
	II: 72 °C / 120 °C			-[1]	-[1]	-[1]	7,5	7,0	6,5	6,0	6,0	6,0
Installation factors												
Dry or wet concrete		γ_{inst}	[-]	1,0								
Water filled hole				-[1]	-[1]	-[1]	1,2					
Cracked concrete												
Characteristic bond resistance in cracked concrete C20/25												
Hammer-drilling with standard drill bit or hollow drill bit (dry or wet concrete)												
Temperature range	I: 50 °C / 80 °C	$\tau_{Rk,100,cr}$	[N/mm²]	-[1]	5,0	5,5	5,5	5,5	5,5	5,0	5,0	4,5
	II: 72 °C / 120 °C			-[1]	4,5	5,0	5,0	5,0	5,0	4,0	4,0	4,0
Hammer-drilling with standard drill bit or hollow drill bit (water filled hole)												
Temperature range	I: 50 °C / 80 °C	$\tau_{Rk,100,cr}$	[N/mm²]	-[1]	-[1]	-[1]	4,5	4,5	4,5	4,0	3,5	3,5
	II: 72 °C / 120 °C			-[1]	-[1]	-[1]	4,0	4,0	4,0	3,5	3,0	3,0
Installation factors												
Dry or wet concrete		γ_{inst}	[-]	1,0								
Water filled hole				-[1]	-[1]	-[1]	1,2					

[1] No performance assessed

Electronic copy of the ETA by DIBt: ETA-20/0603

Table C7.1: Characteristic values for combined pull-out and concrete failure for **fischer internal threaded anchors RG MI** in hammer drilled holes; **uncracked concrete; working life 50 years**

Internal threaded anchor RG MI				**M8**	**M10**	**M12**	**M16**	**M20**
Combined pullout and concrete cone failure								
Calculation diameter		d	[mm]	12	16	18	22	28
Uncracked concrete								
Characteristic bond resistance in uncracked concrete C20/25								
Hammer-drilling with standard drill bit or hollow drill bit (dry or wet concrete)								
Temperature range	I: 50 °C / 80 °C	$\tau_{Rk,ucr}$	[N/mm²]	10,5	10,0	9,5	9,0	8,5
	II: 72 °C / 120 °C			9,0	8,0	8,0	7,5	7,0
Hammer-drilling with standard drill bit or hollow drill bit (water filled hole)								
Temperature range	I: 50 °C / 80 °C	$\tau_{Rk,ucr}$	[N/mm²]	10,0	9,0	9,0	8,5	8,0
	II: 72 °C / 120 °C			7,5	6,5	6,5	6,0	6,0
Installation factors								
Dry or wet concrete		γ_{inst}	[-]	1,0				
Water filled hole				1,2				

fischer injection system FIS V Plus

Performances
Charactersitic values for combined pull-out and concrete failure for fischer internal threaded anchors RG MI; working life 50 years

Annex C 7

Electronic copy of the ETA by DIBt: ETA-20/0603

Table C8.1: **Characteristic values** for combined pull-out and concrete failure for **reinforcing bars** in hammer drilled holes; **uncracked or cracked concrete; working life 50 years**

Nominal diameter of the bar			**ϕ**	**8**	**10**	**12**	**14**	**16**	**20**	**25**	**28**
Combined pullout and concrete cone failure											
Calculation diameter		d	[mm]	8	10	12	14	16	20	25	28
Uncracked concrete											
Characteristic bond resistance in uncracked concrete C20/25											
Hammer-drilling with standard drill bit or hollow drill bit (dry or wet concrete)											
Temperature range	I: 50 °C / 80 °C	$\tau_{Rk,ucr}$	[N/mm²]	11,0	11,0	11,0	10,0	10,0	9,5	9,0	8,5
	II: 72 °C / 120 °C			9,5	9,5	9,0	8,5	8,5	8,0	7,5	7,0
Installation factor											
Dry or wet concrete		γ_{inst}	[-]	1,0							
Cracked concrete											
Characteristic bond resistance in cracked concrete C20/25											
Hammer-drilling with standard drill bit or hollow drill bit (dry or wet concrete)											
Temperature range	I: 50 °C / 80 °C	$\tau_{Rk,cr}$	[N/mm²]	-[1)]	3,0	5,0	5,0	5,0	4,5	4,0	4,0
	II: 72 °C / 120 °C			-[1)]	3,0	4,5	4,5	4,5	4,0	3,5	3,5
Installation factor											
Dry or wet concrete		γ_{inst}	[-]	1,0							

[1)] No performance assessed

Electronic copy of the ETA by DIBt: ETA-20/0603

Table C9.1: Characteristic values for combined pull-out and concrete failure for **fischer rebar anchors FRA** in hammer drilled holes; **uncracked or cracked concrete; working life 50 years**

fischer rebar anchor FRA				**M12**	**M16**	**M20**	**M24**
Combined pullout and concrete cone failure							
Calculation diameter		d	[mm]	12	16	20	25
Uncracked concrete							
Characteristic bond resistance in uncracked concrete C20/25							
Hammer-drilling with standard drill bit or hollow drill bit (dry or wet concrete)							
Temperature range	I: 50 °C / 80 °C	$\tau_{Rk,ucr}$	[N/mm²]	11,0	10,0	9,5	9,5
	II: 72 °C / 120 °C			9,0	8,5	8,0	7,5
Installation factors							
Dry or wet concrete		γ_{inst}	[-]	1,0			
Cracked concrete							
Characteristic bond resistance in cracked concrete C20/25							
Hammer-drilling with standard drill bit or hollow drill bit (dry or wet concrete)							
Temperature range	I: 50 °C / 80 °C	$\tau_{Rk,cr}$	[N/mm²]	5,0	5,0	4,5	4,0
	II: 72 °C / 120 °C			4,5	4,5	4,0	3,5
Installation factors							
Dry or wet concrete		γ_{inst}	[-]	1,0			

Electronic copy of the ETA by DIBt: ETA-20/0603

Table C10.1: Displacements for anchor rods

Anchor rod		M6	M8	M10	M12	M16	M20	M24	M27	M30
Displacement-Factors for tension load[1)]										
Uncracked concrete; Temperature range I, II										
$\delta_{N0\text{-Factor}}$	[mm/(N/mm²)]	0,09	0,09	0,09	0,10	0,10	0,10	0,10	0,11	0,12
$\delta_{N\infty\text{-Factor}}$	[mm/(N/mm²)]	0,10	0,10	0,10	0,12	0,12	0,12	0,13	0,13	0,14
Cracked concrete; Temperature range I, II										
$\delta_{N0\text{-Factor}}$	[mm/(N/mm²)]	-[3)]	0,12	0,12	0,12	0,13	0,13	0,13	0,14	0,15
$\delta_{N0\text{-Factor}}$	[mm/(N/mm²)]	-[3)]	0,25	0,27	0,30	0,30	0,30	0,35	0,35	0,40
Displacement-Factors for shear load[2)]										
Uncracked or cracked concrete; Temperature range I, II										
$\delta_{V0\text{-Factor}}$	[mm/kN]	0,11	0,11	0,11	0,10	0,10	0,09	0,09	0,08	0,07
$\delta_{V\infty\text{-Factor}}$	[mm/kN]	0,12	0,12	0,12	0,11	0,11	0,10	0,10	0,09	0,09

1) Calculation of effective displacement:

$\delta_{N0} = \delta_{N0\text{-Factor}} \cdot \tau_{Ed}$

$\delta_{N\infty} = \delta_{N\infty\text{-Factor}} \cdot \tau_{Ed}$

(τ_{Ed}: Design value of the applied tensile stress)

2) Calculation of effective displacement:

$\delta_{V0} = \delta_{V0\text{-Factor}} \cdot V_{Ed}$

$\delta_{V\infty} = \delta_{V\infty\text{-Factor}} \cdot V_{Ed}$

(V_{Ed}: Design value of the applied shear force)

3) No performance assessed

Table C10.2: Displacements for fischer internal threaded anchors RG MI

Internal threaded anchor RG MI		M8	M10	M12	M16	M20
Displacement-Factors for tension load[1)]						
Uncracked concrete; Temperature range I, II						
$\delta_{N0\text{-Factor}}$	[mm/(N/mm²)]	0,10	0,11	0,12	0,13	0,14
$\delta_{N\infty\text{-Factor}}$	[mm/(N/mm²)]	0,13	0,14	0,15	0,16	0,18
Displacement-Factors for shear load[2)]						
Uncracked concrete; Temperature range I, II						
$\delta_{V0\text{-Factor}}$	[mm/kN]	0,12	0,12	0,12	0,12	0,12
$\delta_{V\infty\text{-Factor}}$	[mm/kN]	0,14	0,14	0,14	0,14	0,14

1) Calculation of effective displacement:

$\delta_{N0} = \delta_{N0\text{-Factor}} \cdot \tau_{Ed}$

$\delta_{N\infty} = \delta_{N\infty\text{-Factor}} \cdot \tau_{Ed}$

(τ_{Ed}: Design value of the applied tensile stress)

2) Calculation of effective displacement:

$\delta_{V0} = \delta_{V0\text{-Factor}} \cdot V_{Ed}$

$\delta_{V\infty} = \delta_{V\infty\text{-Factor}} \cdot V_{Ed}$

(V_{Ed}: Design value of the applied shear force)

Electronic copy of the ETA by DIBt: ETA-20/0603

Table C11.1: Displacements for reinforcing bars

Nominal diameter of the bar	ϕ	8	10	12	14	16	20	25	28
Displacement-Factors for tension load[1)]									
Uncracked concrete; Temperature range I, II									
$\delta_{N0\text{-Factor}}$	[mm/(N/mm²)]	0,09	0,09	0,10	0,10	0,10	0,10	0,10	0,11
$\delta_{N\infty\text{-Factor}}$	[mm/(N/mm²)]	0,10	0,10	0,12	0,12	0,12	0,12	0,13	0,13
Cracked concrete; Temperature range I, II									
$\delta_{N0\text{-Factor}}$	[mm/(N/mm²)]	-[3)]	0,12	0,13	0,13	0,13	0,13	0,13	0,14
$\delta_{N\infty\text{-Factor}}$	[mm/(N/mm²)]	-[3)]	0,27	0,30	0,30	0,30	0,30	0,35	0,37
Displacement-Factors for shear load[2)]									
Uncracked or cracked concrete; Temperature range I, II									
$\delta_{V0\text{-Factor}}$	[mm/kN]	0,11	0,11	0,10	0,10	0,10	0,09	0,09	0,08
$\delta_{V\infty\text{-Factor}}$	[mm/kN]	0,12	0,12	0,11	0,11	0,11	0,10	0,10	0,09

[1)] Calculation of effective displacement:

$\delta_{N0} = \delta_{N0\text{-Factor}} \cdot \tau_{Ed}$

$\delta_{N\infty} = \delta_{N\infty\text{-Factor}} \cdot \tau_{Ed}$

(τ_{Ed}: Design value of the applied tensile stress)

[2)] Calculation of effective displacement:

$\delta_{V0} = \delta_{V0\text{-Factor}} \cdot V_{Ed}$

$\delta_{V\infty} = \delta_{V\infty\text{-Factor}} \cdot V_{Ed}$

(V_{Ed}: Design value of the applied shear force)

[3)] No performance assessed

Table C11.2: Displacements for fischer rebar anchors FRA

fischer rebar anchor FRA		M12	M16	M20	M24
Displacement-Factors for tension load[1)]					
Uncracked concrete; Temperature range I, II					
$\delta_{N0\text{-Factor}}$	[mm/(N/mm²)]	0,10	0,10	0,10	0,10
$\delta_{N\infty\text{-Factor}}$	[mm/(N/mm²)]	0,12	0,12	0,12	0,13
Cracked concrete; Temperature range I, II					
$\delta_{N0\text{-Factor}}$	[mm/(N/mm²)]	0,12	0,13	0,13	0,13
$\delta_{N\infty\text{-Factor}}$	[mm/(N/mm²)]	0,30	0,30	0,30	0,35
Displacement-Factors for shear load[2)]					
Uncracked or cracked concrete; Temperature range I, II					
$\delta_{V0\text{-Factor}}$	[mm/kN]	0,10	0,10	0,09	0,09
$\delta_{V\infty\text{-Factor}}$	[mm/kN]	0,11	0,11	0,10	0,10

[1)] Calculation of effective displacement:

$\delta_{N0} = \delta_{N0\text{-Factor}} \cdot \tau_{Ed}$

$\delta_{N\infty} = \delta_{N\infty\text{-Factor}} \cdot \tau_{Ed}$

(τ_{Ed}: Design value of the applied tensile stress)

[2)] Calculation of effective displacement:

$\delta_{V0} = \delta_{V0\text{-Factor}} \cdot V_{Ed}$

$\delta_{V\infty} = \delta_{V\infty\text{-Factor}} \cdot V_{Ed}$

(V_{Ed}: Design value of the applied shear force)

Electronic copy of the ETA by DIBt: ETA-20/0603

Table C12.1: Characteristic values for **steel failure** under tension / shear load of **fischer anchor rods** and **standard threaded rods** under seismic action performance category **C1 or C2**

Anchor rod / standard threaded rod				**M10**	**M12**	**M16**	**M20**	**M24**	**M27**	**M30**
Bearing capacity under tension load, steel failure[1]										
fischer anchor rods and standard threaded rods, performance category C1 [2]										
Characteristic resistance $N_{Rk,s,C1}$	Steel zinc plated	Property class	5.8	[kN]	29(27)	43	79	123	177	230	281
			8.8		47(43)	68	126	196	282	368	449
	Stainless steel R and high corrosion resistant steel HCR		50		29	43	79	123	177	230	281
			70		41	59	110	172	247	322	393
			80		47	68	126	196	282	368	449
fischer anchor rods, performance category C2 [2]										
Characteristic reistance $N_{Rk,s,C2}$	Steel zinc plated	Property class	5.8	[kN]	-[4]	39	72	108	-[4]	-[4]	-[4]
			8.8		-[4]	61	116	173	-[4]	-[4]	-[4]
	Stainless steel R and high corrosion resistant steel HCR		50		-[4]	39	72	108	-[4]	-[4]	-[4]
			70		-[4]	53	101	152	-[4]	-[4]	-[4]
			80		-[4]	61	116	173	-[4]	-[4]	-[4]
Bearing capacity under shear load, steel failure without lever arm[1]										
fischer anchor rods, performance category C1 [2]										
Characteristic resistance $V_{Rk,s,C1}$	Steel zinc plated	Property class	5.8	[kN]	17(16)	25	47	74	106	138	168
			8.8		23(21)	34	63	98	141	184	225
	Stainless steel R and high corrosion resistant steel HCR		50		15	21	39	61	89	115	141
			70		20	30	55	86	124	161	197
			80		23	34	63	98	141	184	225
Standard threaded rods, performance category C1 [2]										
Characteristic resistance $V_{Rk,s,C1}$	Steel zinc plated	Property class	5.8	[kN]	12(11)	17	33	52	74	97	118
			8.8		16(14)	24	44	69	99	129	158
	Stainless steel R and high corrosion resistant steel HCR		50		11	15	27	43	62	81	99
			70		14	21	39	60	87	113	138
			80		16	24	44	69	99	129	158
fischer anchor rods, performance category C2										
Characteristic resistance $V_{Rk,s,C2}$	Steel zinc plated	Property class	5.8	[kN]	-[4]	14	27	43	-[4]	-[4]	-[4]
			8.8		-[4]	22	44	69	-[4]	-[4]	-[4]
	Stainless steel R and high corrosion resistant steel HCR		50		-[4]	14	27	43	-[4]	-[4]	-[4]
			70		-[4]	20	39	60	-[4]	-[4]	-[4]
			80		-[4]	22	44	69	-[4]	-[4]	-[4]
Factor for the annular gap		α_{gap}		[-]	0,5 (1,0)[3]						

[1] Partial factors for performance category C1 or C2 see table C13.1;
for fischer anchor rods FIS A / RGM the factor for steel ductility is 1,0
[2] Values in brackets are valid for undersized threaded rods with smaller stress area A_s and for hot dip galvanised standard threaded rods according to EN ISO 10684:2004+AC:2009.
[3] Values in brackets are valid for filled annular gaps between the anchor rod and the through-hole in the attachment. It is necessary to use the fischer filling disc according to Annex A 5
[4] No performance assessed

fischer injection system FIS V Plus

Performances
Characteristic values for steel failure under tension / shear load for fischer anchor rods and standard threaded rods under seismic action (performance category C1 / C2)

Annex C 12

Electronic copy of the ETA by DIBt: ETA-20/0603

Table C13.1: Partial factors for **fischer anchor rods, standard threaded rods** under seismic action performance category **C1 or C2**

Anchor rod / standard threaded rod				**M10**	**M12**	**M16**	**M20**	**M24**	**M27**	**M30**
Tension load, steel failure[1]										
Partial factor $\gamma_{Ms,N}$	Steel zinc plated	Property class	5.8	[-]	1,50					
			8.8		1,50					
	Stainless steel R and high corrosion resistant steel HCR		50		2,86					
			70		1,50[2] / 1,87					
			80		1,60					
Shear load, steel failure[1]										
Partial factor $\gamma_{Ms,V}$	Steel zinc plated	Property class	5.8	[-]	1,25					
			8.8		1,25					
	Stainless steel R and high corrosion resistant steel HCR		50		2,38					
			70		1,25[2] / 1,56					
			80		1,33					

[1] In absence of other national regulations
[2] Only admissible for high corrosion resistant steel HCR, with f_{yk} / f_{uk} ≥ 0,8 and A_5 > 12 % (e.g. fischer anchor rods)

Electronic copy of the ETA by DIBt: ETA-20/0603

Table C14.1: Characteristic values for combined pull-out and concrete failure for **fischer anchor rods** and **standard threaded rods** in hammer drilled holes under seismic action performance category **C1, working life 50 and 100 years**

Anchor rod / standard threaded rod				**M10**	**M12**	**M16**	**M20**	**M24**	**M27**	**M30**
Characteristic bond resistance, combined pullout and concrete cone failure										
Hammer-drilling with standard drill bit or hollow drill bit (dry or wet concrete)										
Temperature range	I: 50 °C / 80 °C	$\tau_{Rk,C1}$	[N/mm²]	4,5	5,5	5,5	5,5	4,5	4,0	4,0
	II: 72 °C / 120 °C			4,0	4,5	4,5	4,5	4,0	3,5	3,5
Hammer-drilling with standard drill bit or hollow drill bit (water filled hole)										
Temperature range	I: 50 °C / 80 °C	$\tau_{Rk,C1}$	[N/mm²]	-[1)]	5,0	5,0	4,5	4,0	3,5	3,5
	II: 72 °C / 120 °C			-[1)]	4,0	4,0	4,0	3,5	3,0	3,0
Installation factors										
Dry or wet concrete		γ_{inst}	[-]	1,0						
Water filled hole				-[1)]	1,2					

[1)] No performance assessed

Electronic copy of the ETA by DIBt: ETA-20/0603

Table C15.1: Characteristic values for combined pull-out and concrete failure for **fischer anchor rods** in hammer drilled holes under seismic action performance category **C2; working life 50 and 100 years**

Anchor rod / standard threaded rod				**M12**	**M16**	**M20**
Characteristic bond resistance, combined pullout and concrete cone failure						
Hammer-drilling with standard drill bit or hollow drill bit (dry or wet concrete)						
Temperature range	I: 50 °C / 80 °C	$\tau_{Rk,C2}$	[N/mm²]	1,5	1,3	2,1
	II: 72 °C / 120 °C			1,3	1,2	1,9
Hammer-drilling with standard drill bit or hollow drill bit (water filled hole)						
Temperature range	I: 50 °C / 80 °C	$\tau_{Rk,C2}$	[N/mm²]	1,3	1,1	1,8
	II: 72 °C / 120 °C			1,1	1,0	1,6
Displacement-Factors for tension load[1)]						
$\delta_{N,C2\ (DLS)}$-Factor		[mm/(N/mm²)]		0,20	0,13	0,21
$\delta_{N,C2\ (ULS)}$-Factor				0,38	0,18	0,24
Displacement-Factors for shear load[2)]						
$\delta_{V,C2\ (DLS)}$-Factor		[mm/kN]		0,18	0,10	0,07
$\delta_{V,C2\ (ULS)}$-Factor				0,25	0,14	0,11

[1)] Calculation of effective displacement:

$\delta_{N,C2\ (DLS)} = \delta_{N,C2\ (DLS)\text{-Factor}} \cdot \tau_{Ed}$

$\delta_{N,C2\ (ULS)} = \delta_{N,C2\ (ULS)\text{-Factor}} \cdot \tau_{Ed}$

(τ_{Ed}: Design value of the applied tensile stress)

[2)] Calculation of effective displacement:

$\delta_{V,C2\ (DLS)} = \delta_{V,C2\ (DLS)\text{-Factor}} \cdot V_{Ed}$

$\delta_{V,C2\ (ULS)} = \delta_{V,C2\ (ULS)\text{-Factor}} \cdot V_{Ed}$

(V_{Ed}: Design value of the applied shear force)

[3)] No performance assessed

Electronic copy of the ETA by DIBt: ETA-20/0603